TOYOTA

Owner's Manual

For your safety and comfort,
read carefully and keep in the vehicle.

LAND CRUISER

Foreword

Welcome to the growing group of value-conscious people who drive Toyotas. We are proud of the advanced engineering and quality construction of each vehicle we build.

This Owner's Manual explains the features of your new Toyota. Please read it and follow the instructions carefully so that you can enjoy many years of safe motoring.

When it comes to service, remember that your Toyota dealer knows your vehicle best and is interested in your complete satisfaction. He will provide quality maintenance and any other assistance you may require.

Please leave this Owner's Manual in this vehicle at the time of resale. The next owner will need this information also.

All information and specifications in this manual are current at the time of printing. However, because of Toyota's policy of continual product improvement, we reserve the right to make changes at any time without notice.

Please note that this manual applies to all models and explains all equipment, including options. Therefore, you may find some explanations for equipment not installed on your vehicle.

TOYOTA MOTOR CORPORATION

©1991 TOYOTA MOTOR CORPORATION

All rights reserved. This material may not be reproduced or copied, in whole or in part, without the written permission of Toyota Motor Corporation.

Accessories, spare parts and modification of your Toyota

A wide variety of non genuine spare parts and accessories for Toyota vehicles are currently available in the market. Using these spare parts and accessories which are not genuine Toyota products may adversely affect the safety of your vehicle, even though these parts may be approved by certain authorities in your country. Toyota therefore cannot accept any guarantee or liability for spare parts and accessories which are not genuine Toyota products, nor for replacement or installation involving such parts.

This vehicle should not be modified with non genuine Toyota products. Modification with non genuine Toyota products could affect its performance, safety or durability, and may even violate governmental regulations. In addition, damage or performance problem resulting from the modification may not be covered under warranty.

Installation of a mobile two-way radio system

As the installation of a mobile two-way radio system in your vehicle could affect electronic systems such as electronic fuel injection system, be sure to check with your Toyota dealer for precautionary measures or special instructions regarding installation.

Maintenance schedule

Please refer to the separate "Toyota Service Booklet" or "Toyota Warranty Booklet".

On-pavement and off-road driving tips

This vehicle will handle and maneuver differently from an ordinary passenger car because it is also designed for off-road use. As with other vehicles of this type, failure to operate this vehicle correctly may result in loss of control or an accident. Be sure to read "Off-road vehicle precautions" in Part 2 and "Off-road driving precautions" in Part 3.

Table of Contents

Part

1 OPERATION OF INSTRUMENTS AND CONTROLS—

Chapter — Page

1 - 1 Overview of instruments and controls 1
1 - 2 Keys and Doors 7
1 - 3 Seats, Seat belts, Steering wheel and Mirrors 31
1 - 4 Lights, Wipers and Defogger 47
1 - 5 Gauges, Meters and Warning lights 55
1 - 6 Ignition switch, Transmission and Parking brake 63
1 - 7 Car audio and Air conditioning system 75
1 - 8 Other equipments 101

2 INFORMATION BEFORE DRIVING YOUR TOYOTA 111

3 STARTING AND DRIVING 121

4 IN CASE OF AN EMERGENCY 135

5 CORROSION PREVENTION AND APPEARANCE CARE 151

6 MAINTENANCE REQUIREMENTS 155

7 DO-IT-YOURSELF MAINTENANCE—

Chapter

7 - 1 Introduction 157
7 - 2 Engine and Chassis 163
7 - 3 Electrical component 185

8 SPECIFICATIONS 203

9 INDEX 213

Safety and vehicle damage warnings

In this manual, you will see CAUTION and NOTICE warnings. These are used in the following ways:

CAUTION:

This is a warning against something which may cause injury to people if the warning is ignored. You are informed what you must or must not do in order to avoid or reduce the risk to yourself and other people.

NOTICE:

This is a warning against something which may cause damage to the vehicle or its equipment. You are informed what you must or must not do in order to avoid or reduce the risk of damage to your vehicle and its equipment.

Model code

Check the model code to see what type of model your vehicle is.

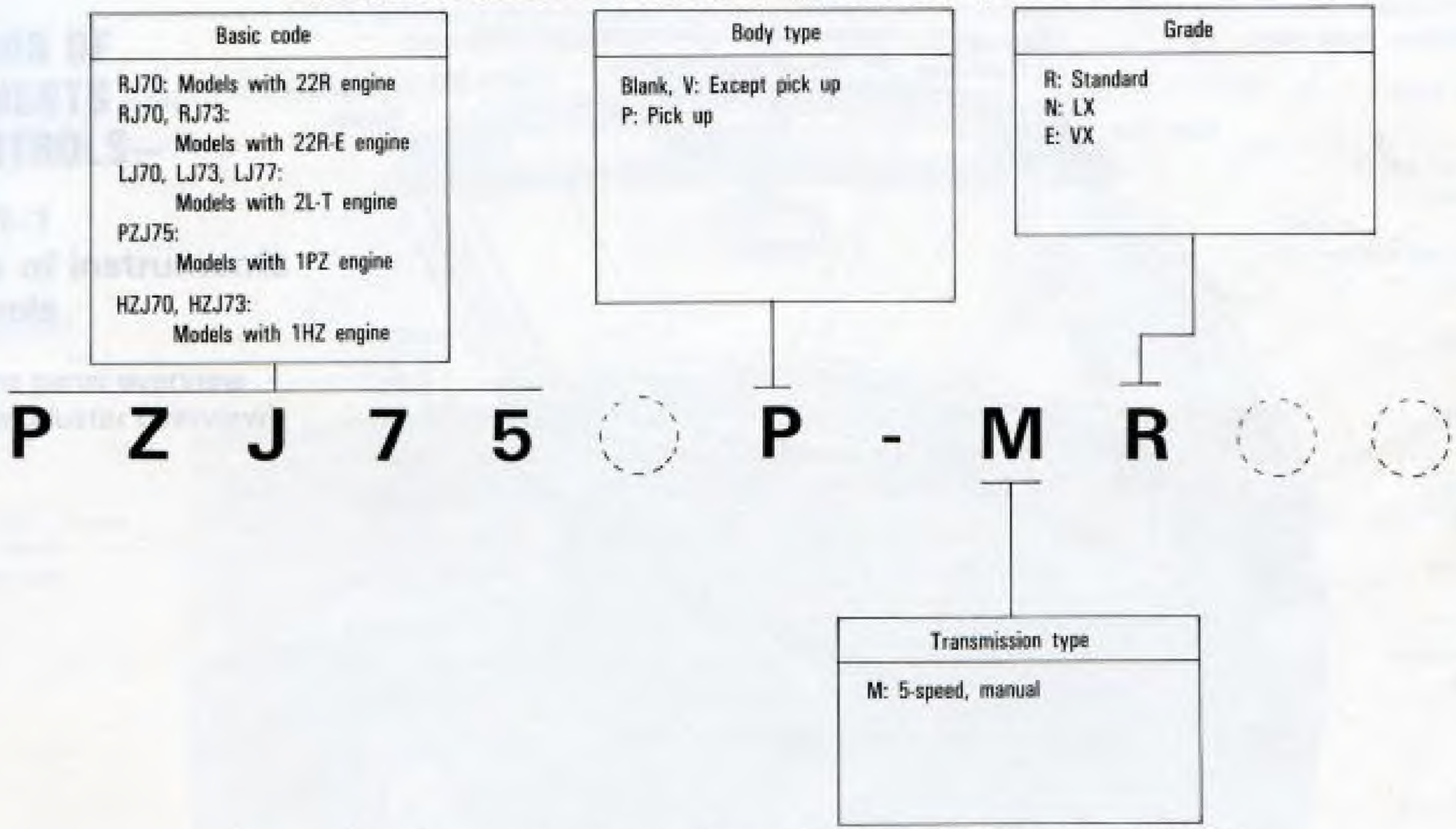

The model code appears on the manufacturer's plate with the heading "MODEL". See "Your Toyota's identification" in Part 2 for the manufacturer's plate location.

Part 1
OPERATION OF INSTRUMENTS AND CONTROLS–

Chapter 1-1
Overview of instruments and controls

- Instrument panel overview
- Instrument cluster overview

Instrument panel overview (left-hand drive vehicles)

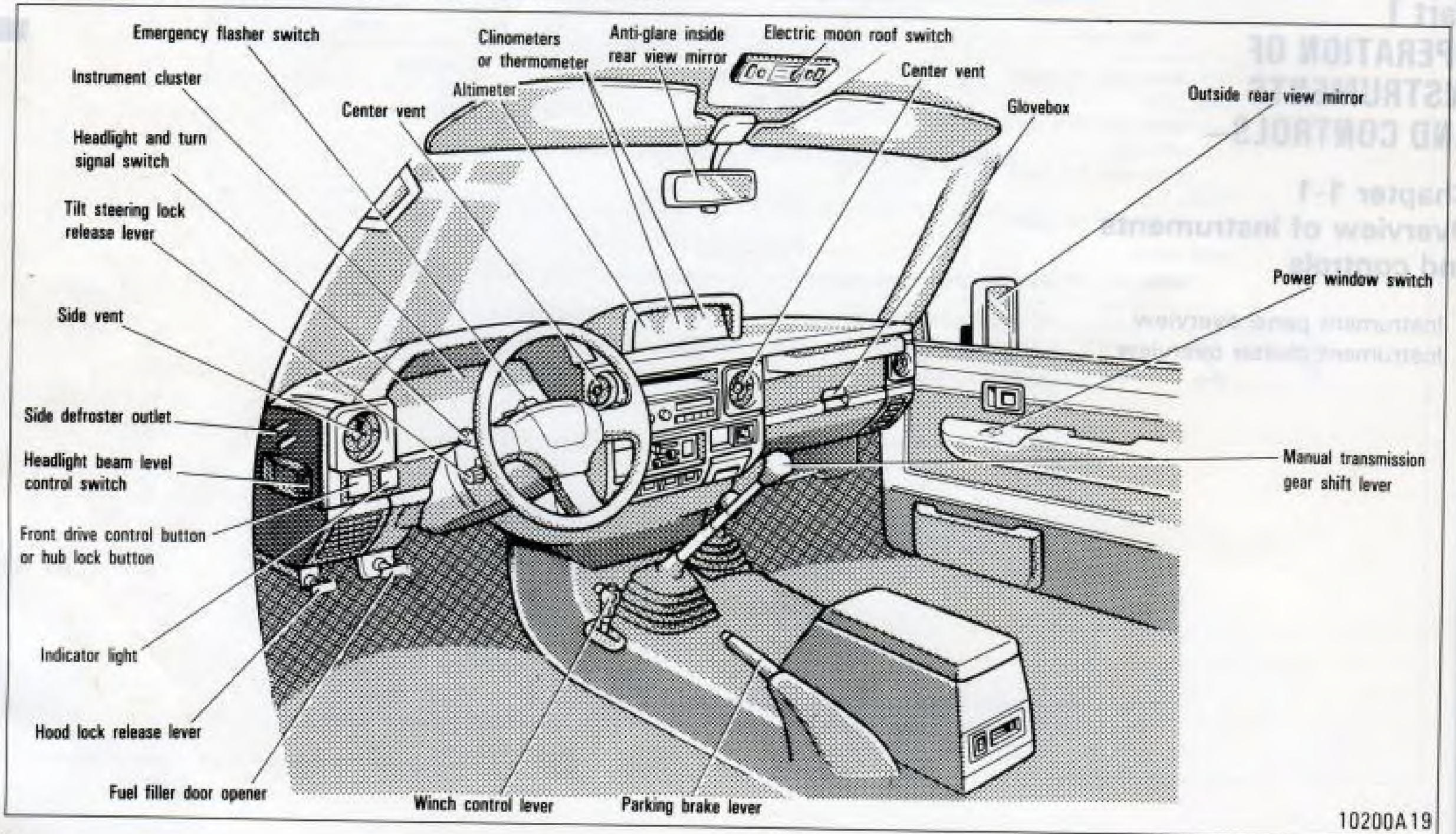

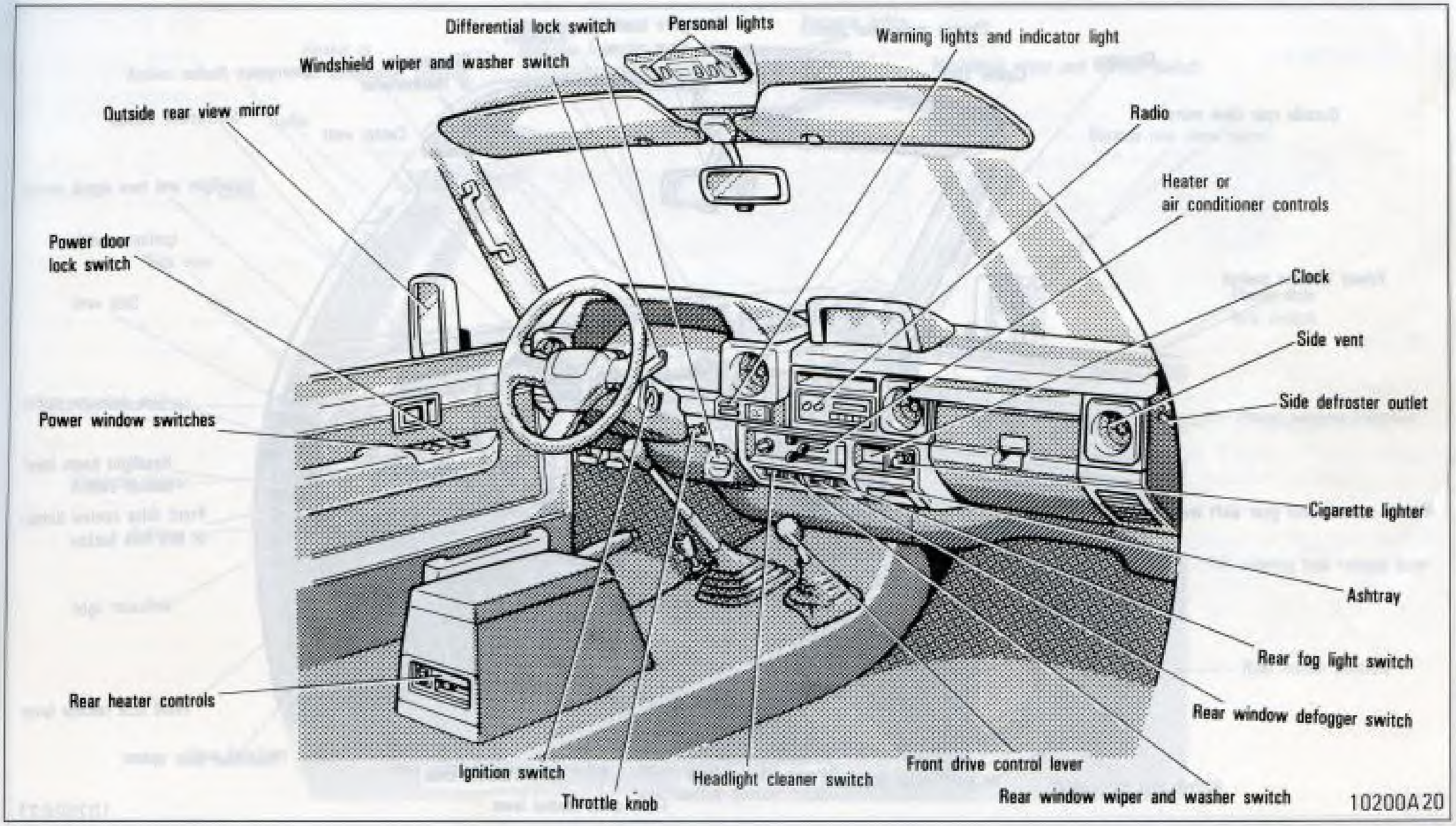
Differential lock switch
Personal lights
Warning lights and indicator light
Windshield wiper and washer switch
Outside rear view mirror
Radio
Heater or
air conditioner controls
Power door
lock switch
Clock
Side vent
Side defroster outlet
Power window switches
Cigarette lighter
Ashtray
Rear fog light switch
Rear heater controls
Rear window defogger switch
Ignition switch
Front drive control lever
Headlight cleaner switch
Throttle knob
Rear window wiper and washer switch
10200A20

Instrument panel overview (right-hand drive vehicles)

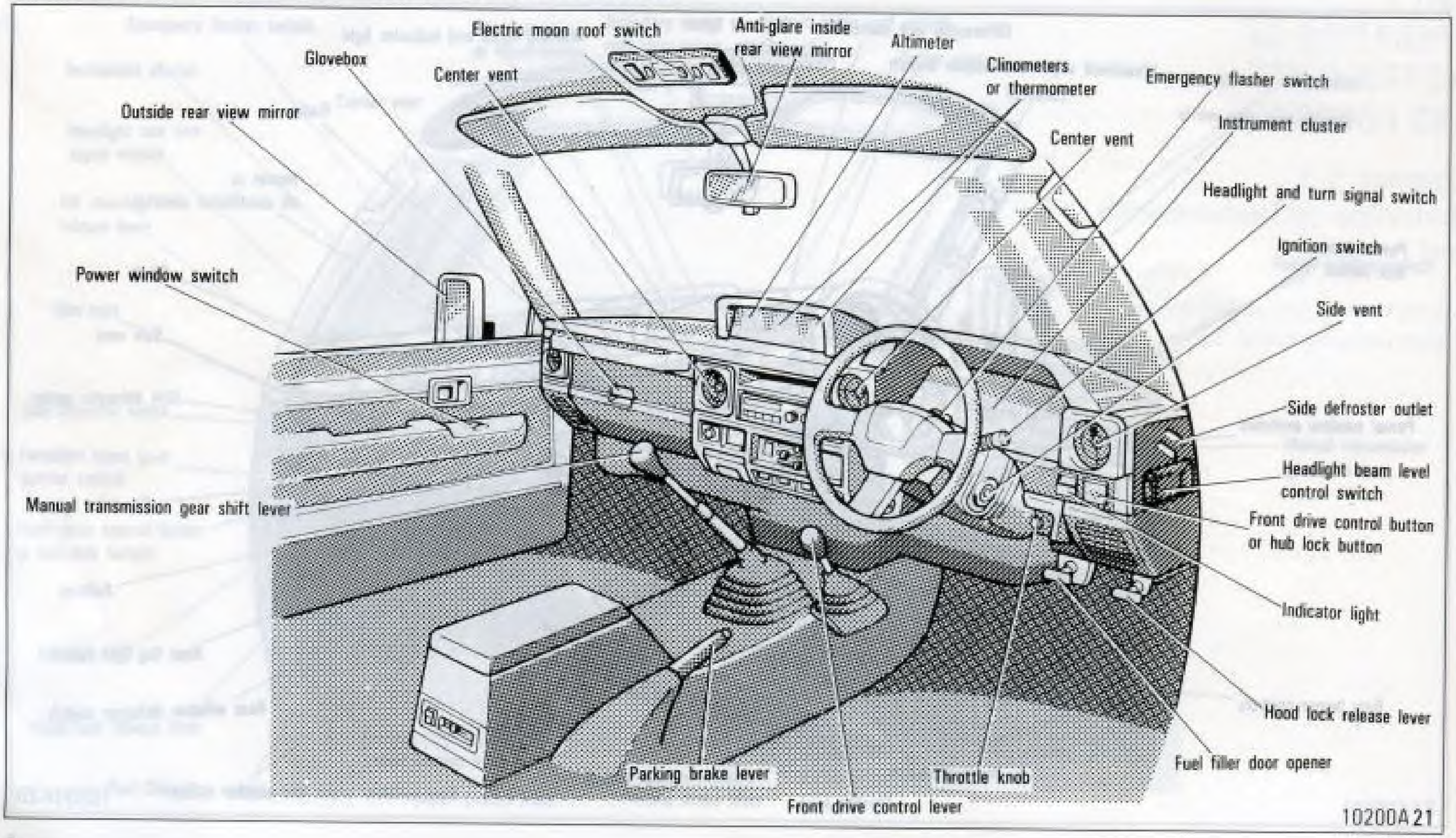

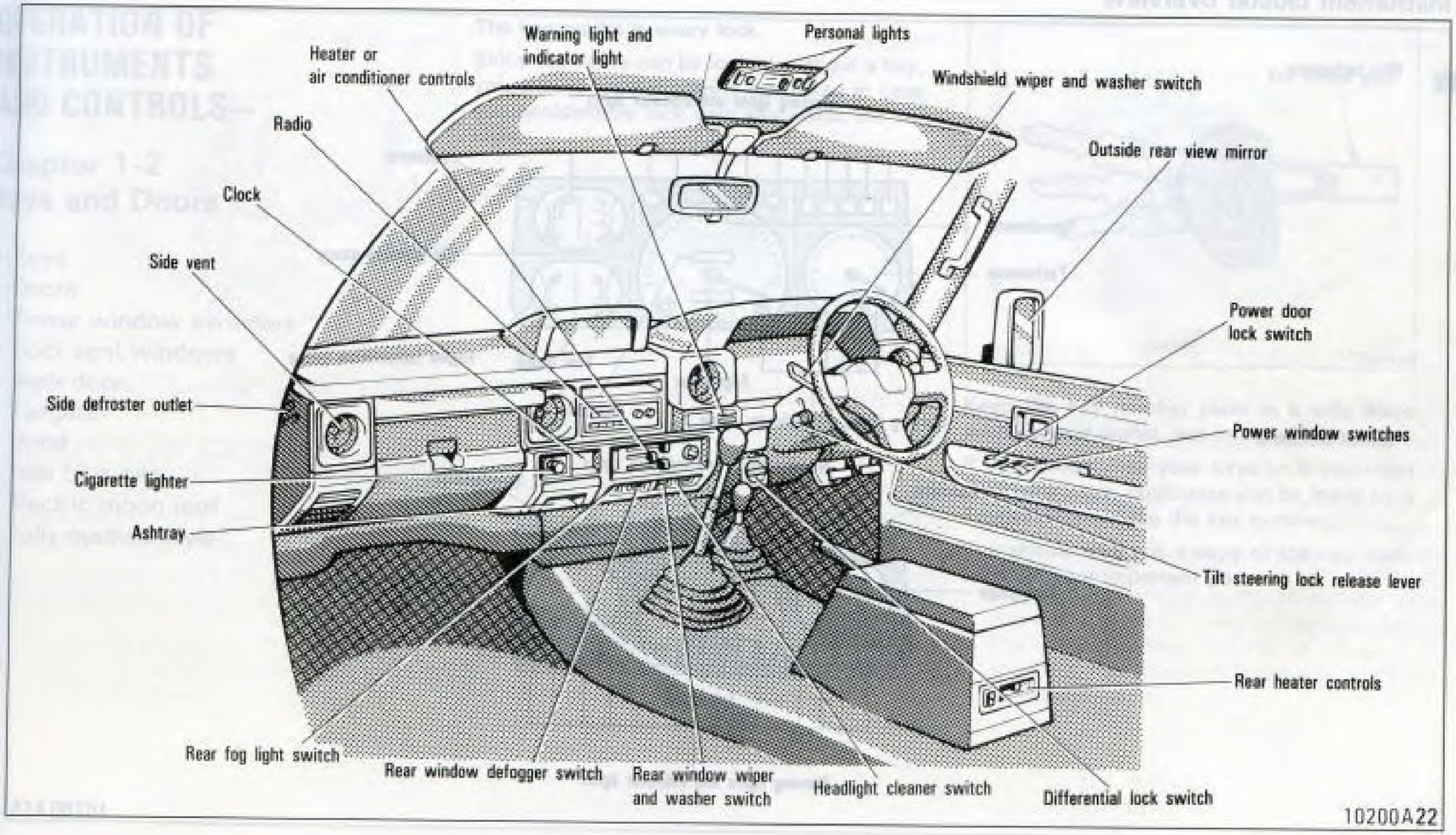
Warning light and indicator light
Personal lights
Heater or air conditioner controls
Windshield wiper and washer switch
Radio
Outside rear view mirror
Clock
Side vent
Power door lock switch
Side defroster outlet
Power window switches
Cigarette lighter
Ashtray
Tilt steering lock release lever
Rear heater controls
Rear fog light switch
Rear window defogger switch
Rear window wiper and washer switch
Headlight cleaner switch
Differential lock switch
10200A22

Instrument cluster overview

With tachometer

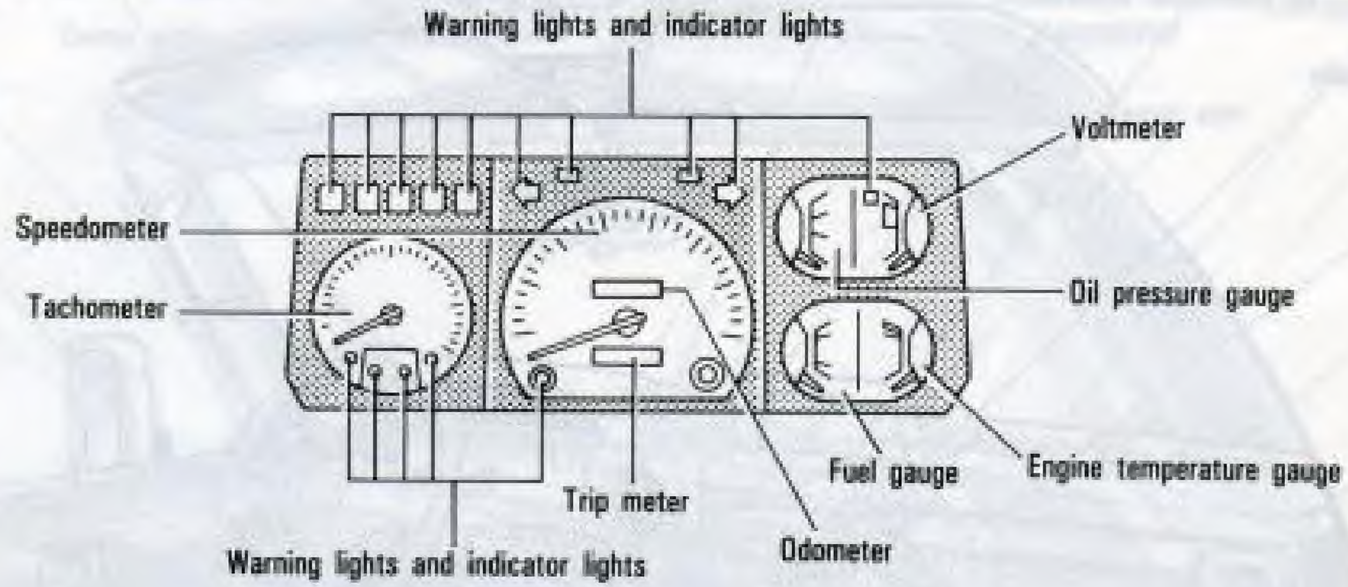

Without tachometer

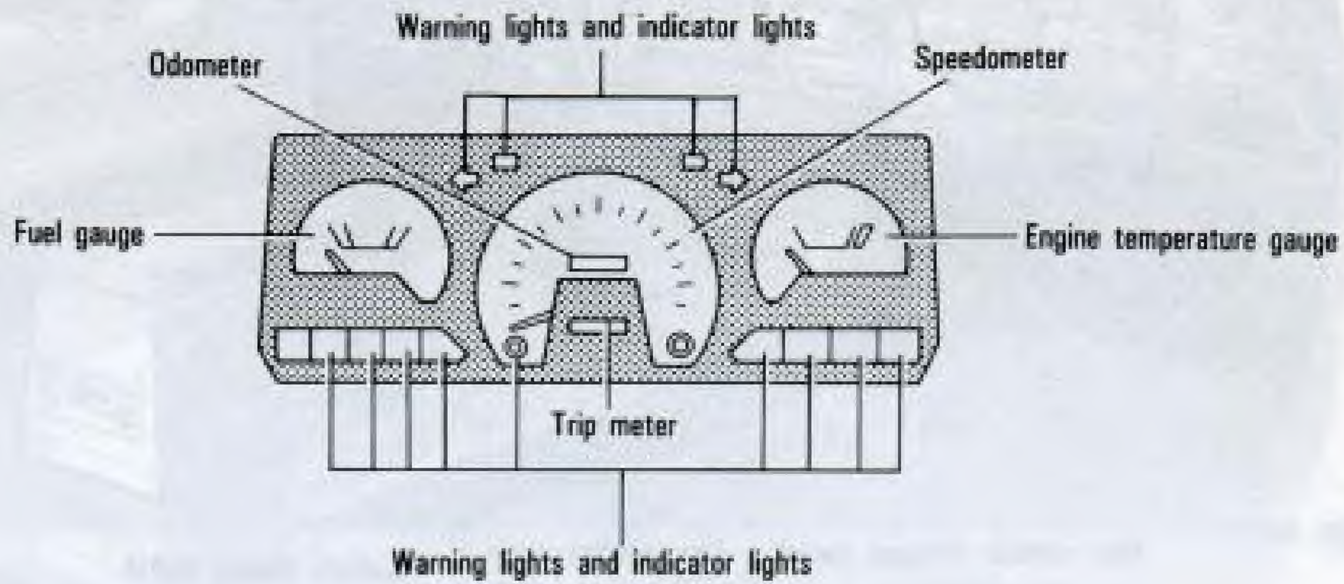

10200A15

Part 1
OPERATION OF INSTRUMENTS AND CONTROLS–

Chapter 1-2
Keys and Doors

- Keys
- Doors
- Power window switches
- Door vent windows
- Back door
- Tailgate
- Hood
- Fuel tank cap
- Electric moon roof
- Fully-opened style

Keys

The key works in every lock.

Since the doors can be locked without a key, you should always carry a spare key in case you accidentally lock your key inside the vehicle.

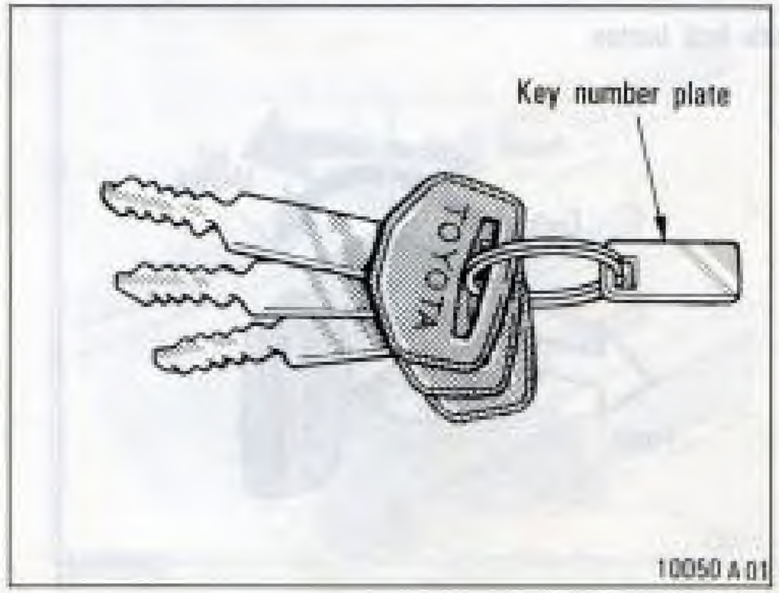

Keep the key number plate in a safe place such as your wallet, not in the vehicle.

If you should lose your keys or if you need additional keys, duplicates can be made by a Toyota dealer using the key number.

You should also put a copy of the key number with your important papers.

Doors

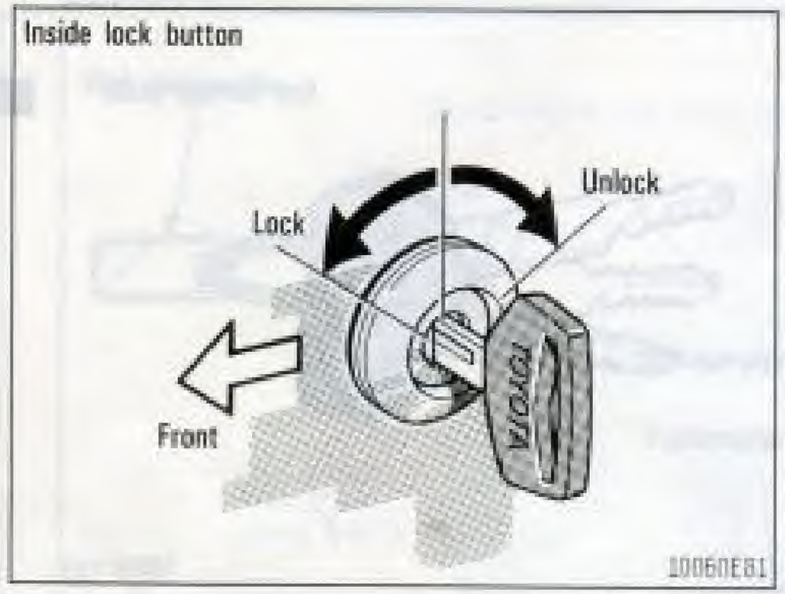

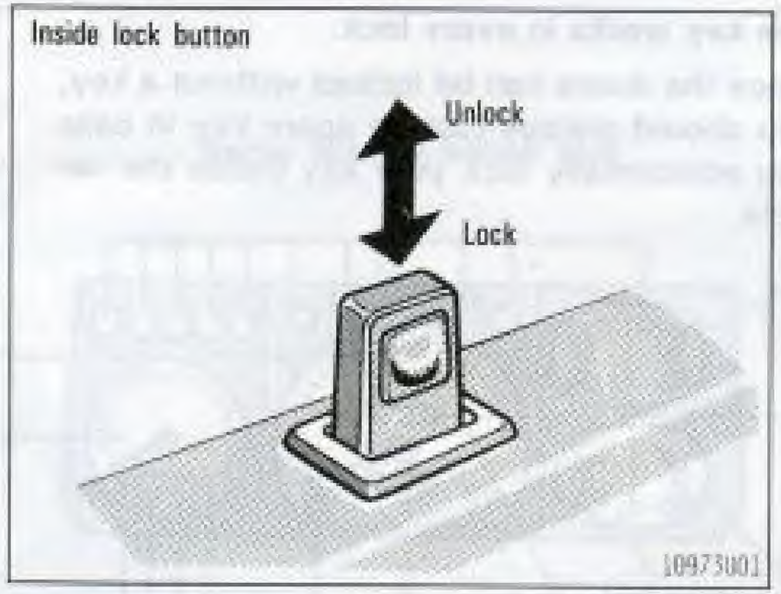

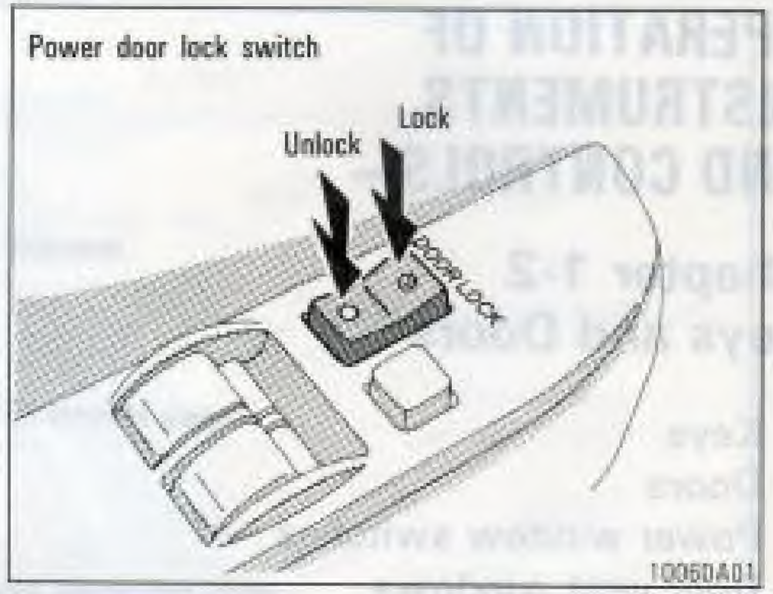

LOCKING WITH KEY

Turn the key towards the front of the vehicle to lock and towards the back to unlock.

On some vehicles with a power door lock system, locking the driver's door locks all the other doors simultaneously. To unlock all the doors simultaneously, unlock the driver's door. The back door will also be controlled at the same time.

LOCKING WITH INSIDE LOCK BUTTON

Push in the lock button to lock and pull it out to unlock.

If you want to lock the door from the outside, push the button in before closing the door. The outside door handle must be held up while the door is being closed. Be careful not to lock your keys in the vehicle.

LOCKING WITH POWER DOOR LOCK SWITCH

To lock or unlock the back door or all the side doors and back door simultaneously, push the switch.

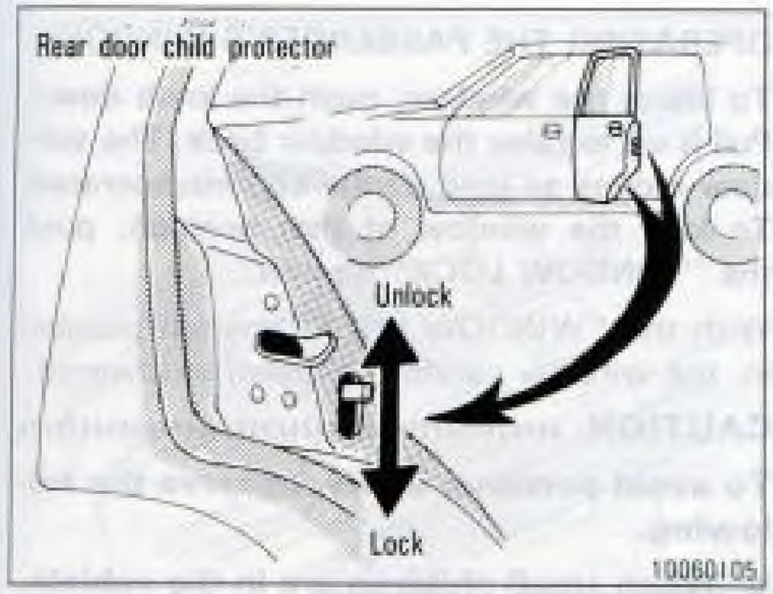

LOCKING WITH REAR DOOR CHILD-PROTECTOR (4-door models)

To lock a rear door so that it does not open from the inside, push the lever down and then close the door. When locked with a child-protector alone, the rear door can be opened from the outside.

We recommend using this feature whenever small children are in the vehicle.

CAUTION:

- **Before driving, be sure that the doors are closed.**
- **When small children are on the rear seats of the vehicle, the child-protector system should be used to help prevent the doors from being opened unintentionally from the inside during driving.**
- **If the doors are left unlocked in case of an accident while driving, they can be opened from the outside.**

Power window switches (2-door models)

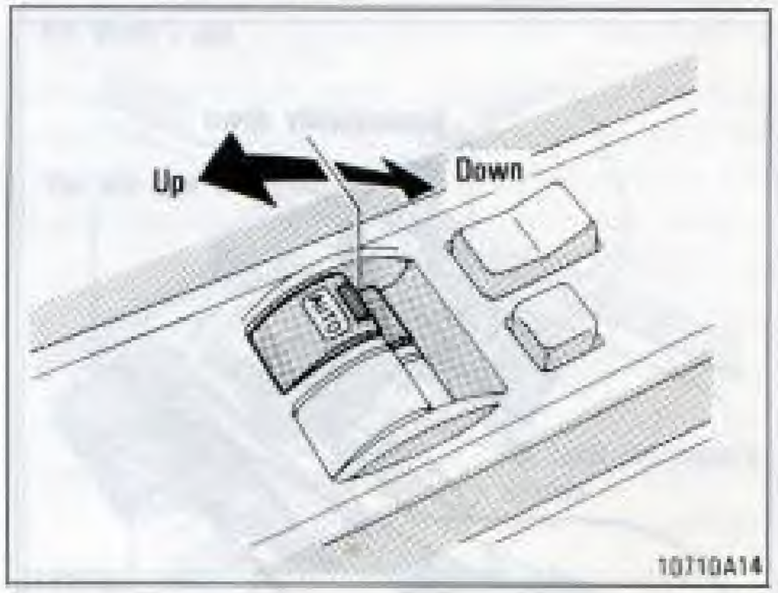

To raise or lower the windows, use the switch on each door. The passenger's window can also be controlled by the switches on the driver's door.

The ignition key must be in the "ON" position.

OPERATING THE DRIVER'S WINDOW

To lower the window, push the knob halfway down. Pull it up to raise the window back. The window moves as long as the knob is operated. For automatic operation, push the knob fully down.

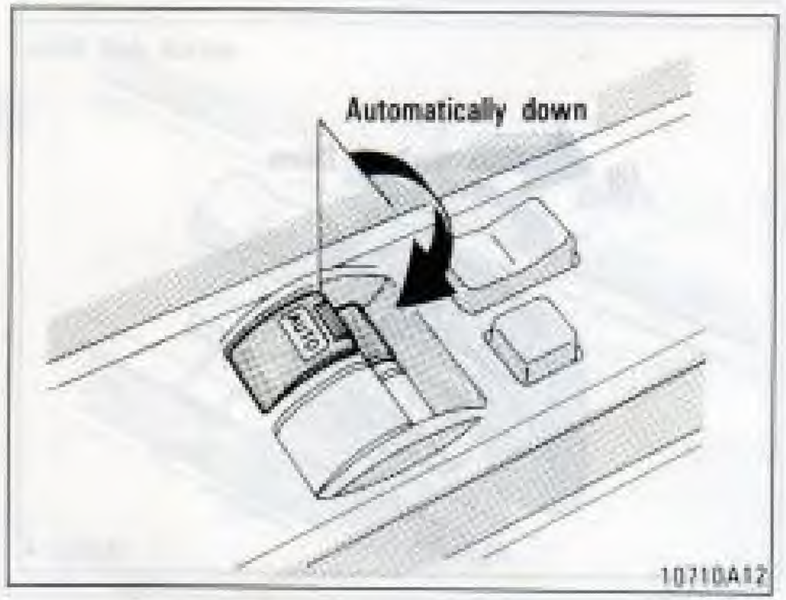

In automatic operation, the window will fully open even if you let go of the knob. To stop the window partway, lightly pull the knob for a second and release.

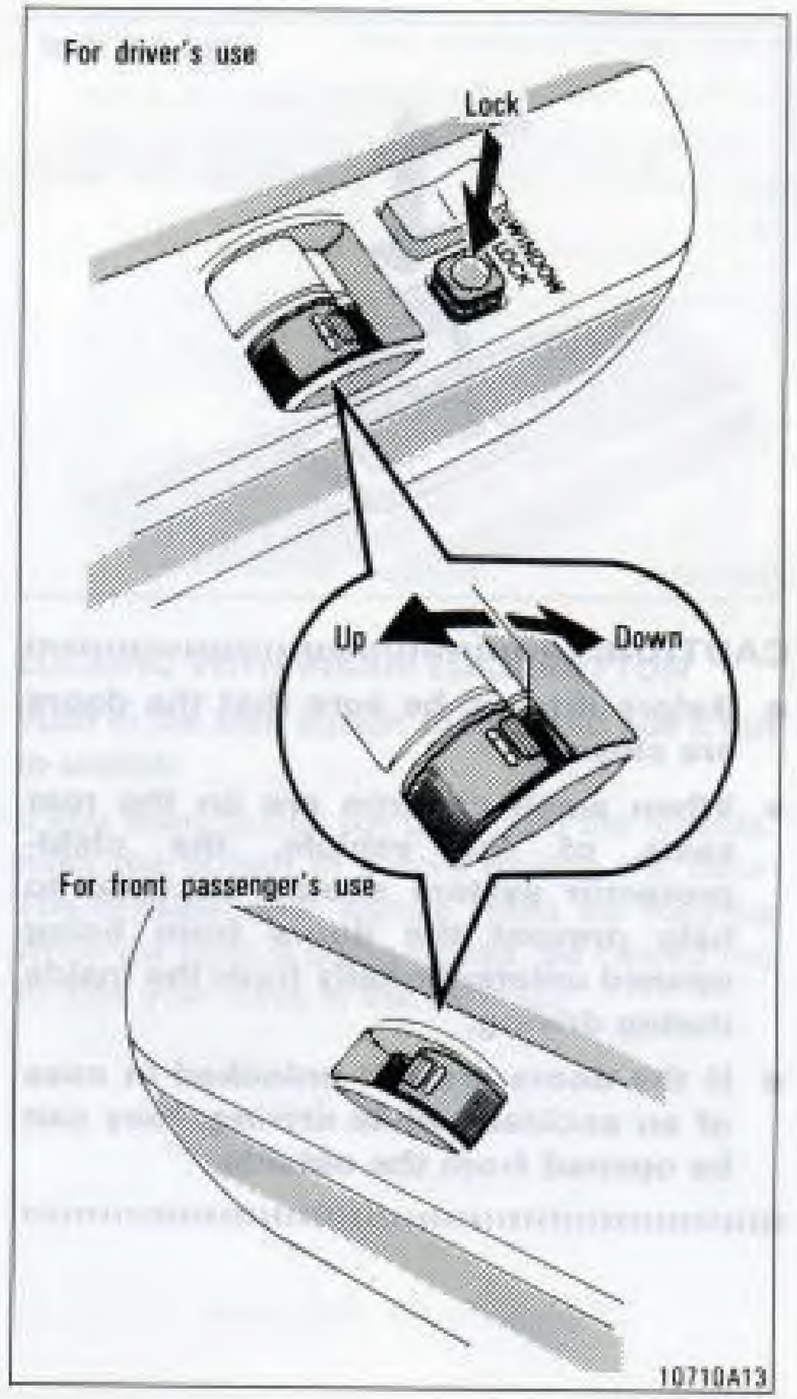

OPERATING THE PASSENGER'S WINDOW

To lower the window, push the knob down. Pull it up to raise the window back. The window moves as long as the knob is operated. To lock the window at that position, push the "WINDOW LOCK" switch.

With the "WINDOW LOCK" switch pressed in, the window cannot be raised or lowered.

CAUTION:

To avoid personal injury, observe the following.

- **When small children are in the vehicle, take care not to allow them unexpected use of the switches. Use the window locking feature described above or, if you must leave them unattended, remove the key from the ignition switch.**
- **When closing the windows, be sure that no one has his/her head, hands or arms sticking out the window.**

Power window switches (4-door models)

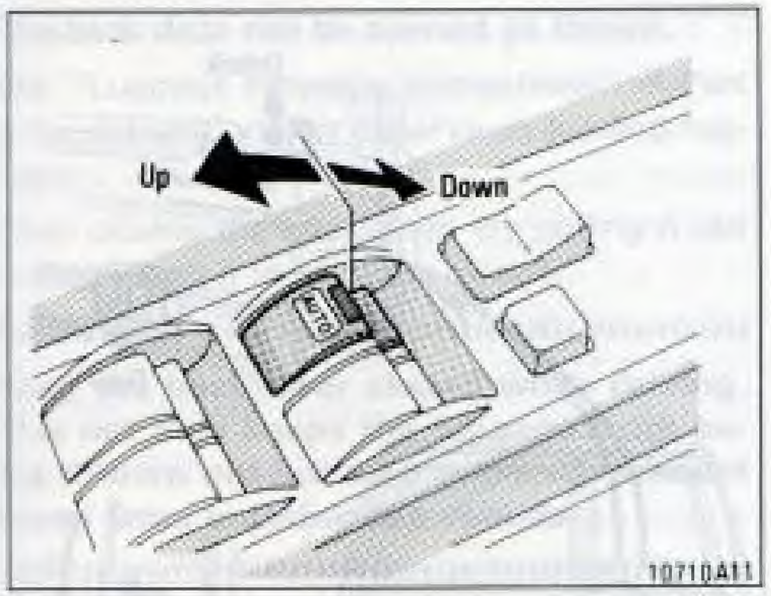

To raise or lower the windows, use the switch on each door. The passengers' windows can also be controlled by the switches on the driver's door.

The ignition key must be in the "ON" position.

OPERATING THE DRIVER'S WINDOW

To lower the window, push the knob halfway down. Pull it up to raise the window back. The window moves as long as the knob is operated. For automatic operation, push the knob fully down.

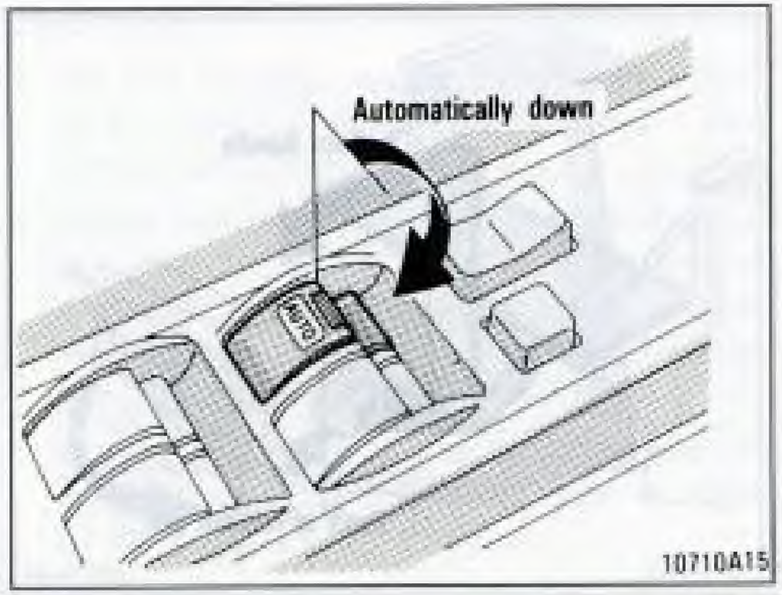

In automatic operation, the window will fully open even if you let go of the knob. To stop the window partway, lightly pull the knob for a second and release.

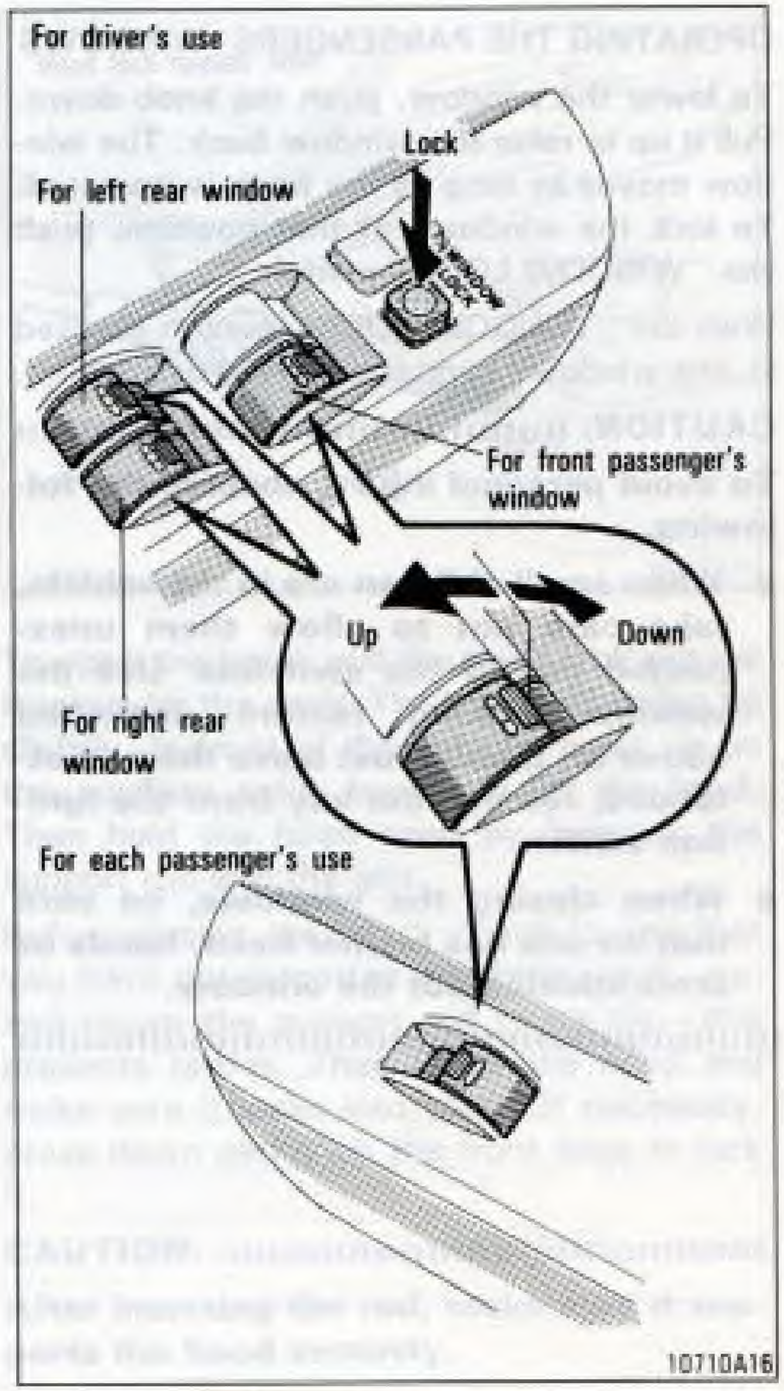

OPERATING THE PASSENGERS' WINDOWS

To lower the window, push the knob down. Pull it up to raise the window back. The window moves as long as the knob is operated. To lock the windows at that position, push the "WINDOW LOCK" switch.

With the "WINDOW LOCK" switch pressed in, the windows cannot be raised or lowered.

CAUTION:

To avoid personal injury, observe the following.

- **When small children are in the vehicle, take care not to allow them unexpected use of the switches. Use the window locking feature described above or, if you must leave them unattended, remove the key from the ignition switch.**
- **When closing the windows, be sure that no one has his/her head, hands or arms sticking out the window.**

Door vent windows

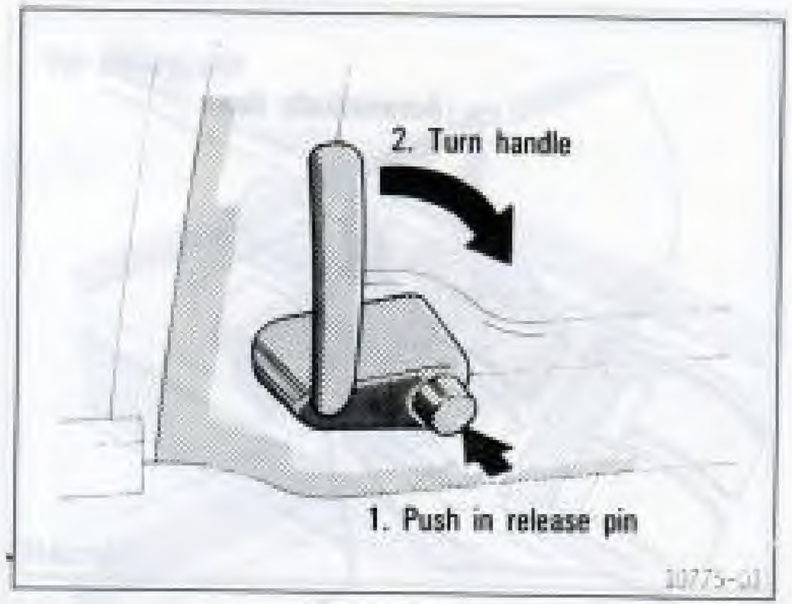

To open: Push in the release pin, turn the handle forward and push the window outward.

To close: Pull the window inward and turn the handle until it locks against the window frame.

To protect things in the vehicle when you leave the vehicle unattended, be sure to lock the vent windows as well as the doors.

Back door (except pick-up)

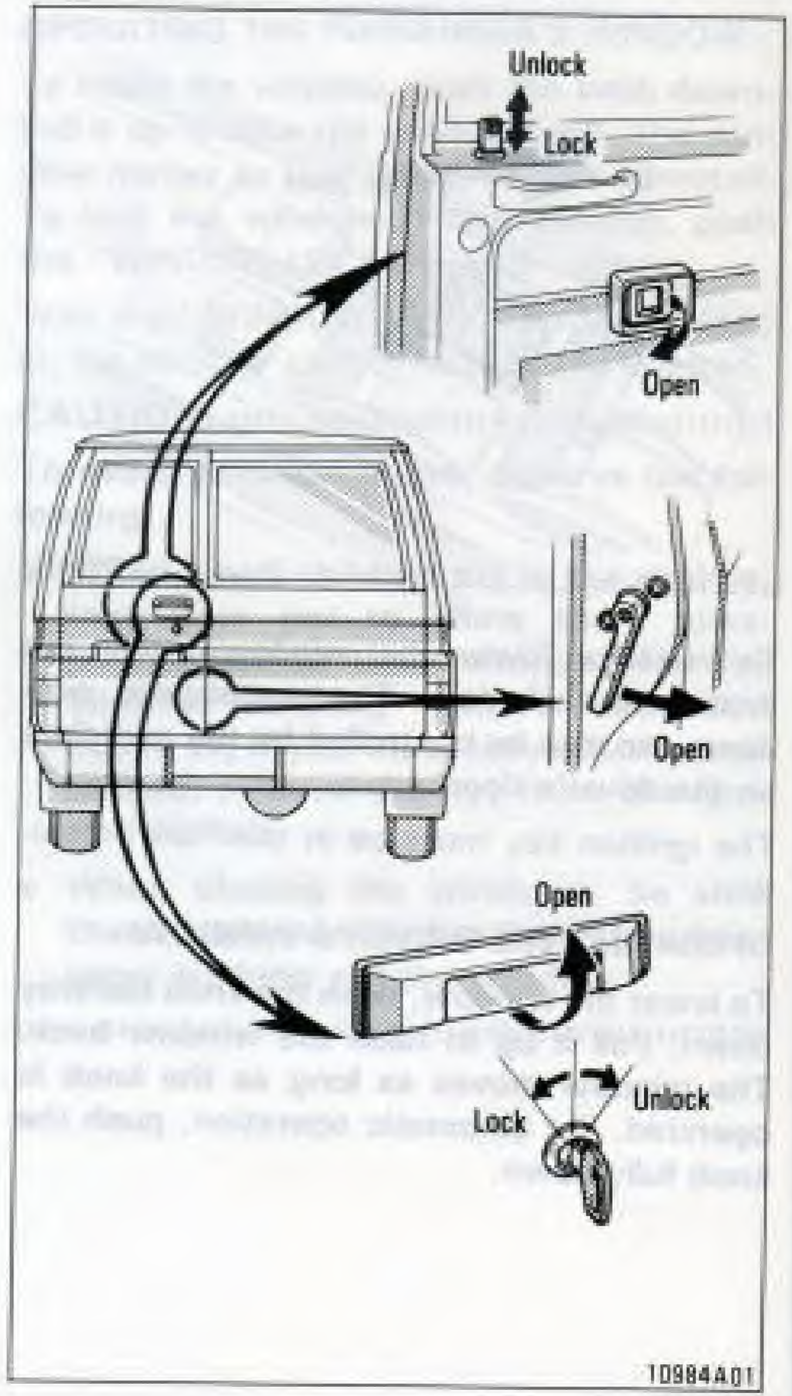

The back door can be opened as shown.

See "Luggage stowage precautions" in Part 2 for precautions to observe in loading luggage.

After closing the back door, try pulling it out to make sure it is securely closed.

CAUTION:

Keep the back door closed while driving. This not only keeps the luggage from being thrown out but also prevents exhaust gases from entering the vehicle.

Tailgate (pick-up)

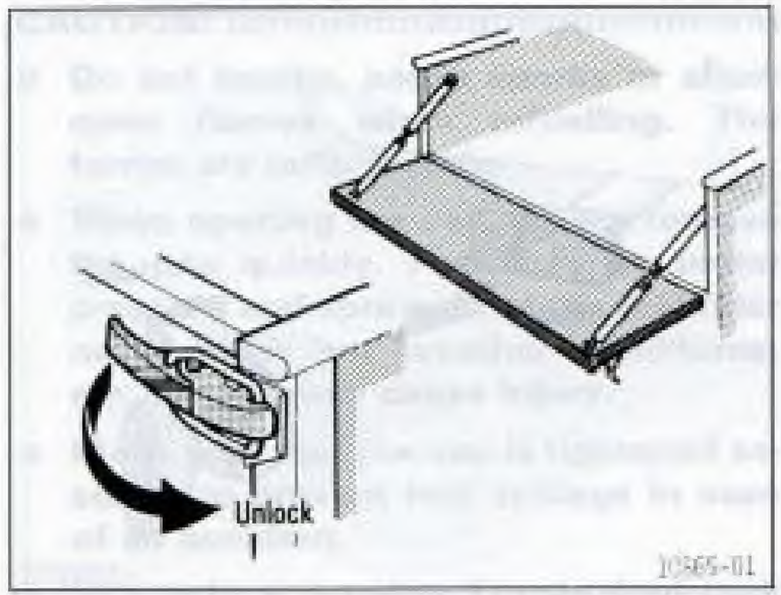

To lower the tailgate, unlock the latches as shown.

The chains will hold the tailgate in a straight open position as shown.

See "Luggage stowage precautions" in Part 2 for precautions to observe in loading luggage.

After closing the tailgate, try pulling it down to make sure that it is securely closed.

NOTICE:

To avoid tailgate damage, do not open the tailgate with the chains released.

Avoid driving with the tailgate open.

Hood

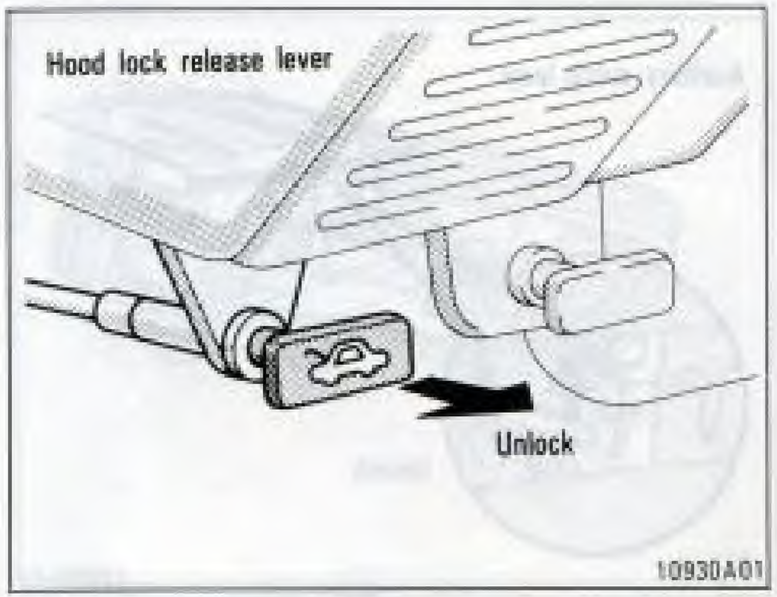

To open the hood, pull the hood lock release lever under the dash. The hood will spring up slightly. In front of the vehicle, press up on the auxiliary catch lever and lift the hood. Then hold the hood open by inserting the support rod into the slot.

Before closing the hood, check to see that you have not forgotten any tools, rags, etc. and return the support rod to its clip—this prevents rattles. Then lower the hood and make sure it locks into place. If necessary, press down gently on the front edge to lock it.

CAUTION:

After inserting the rod, make sure it supports the hood securely.

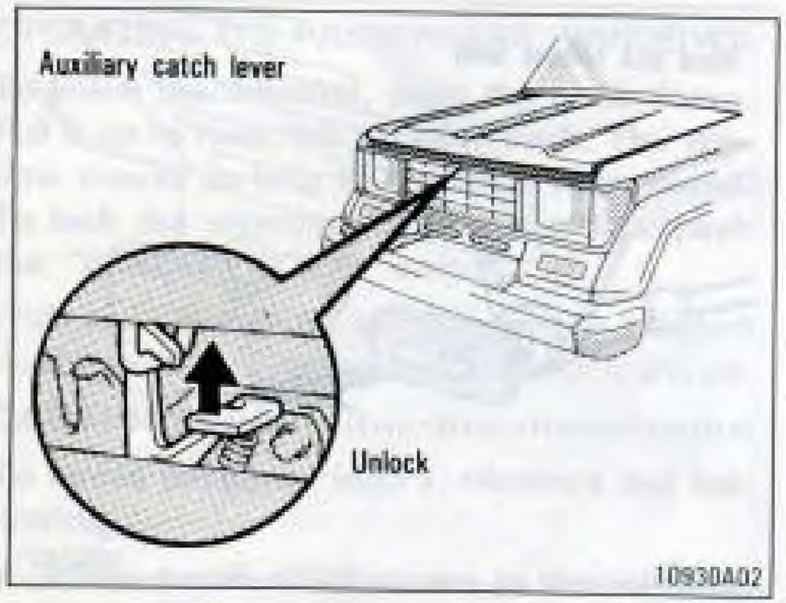

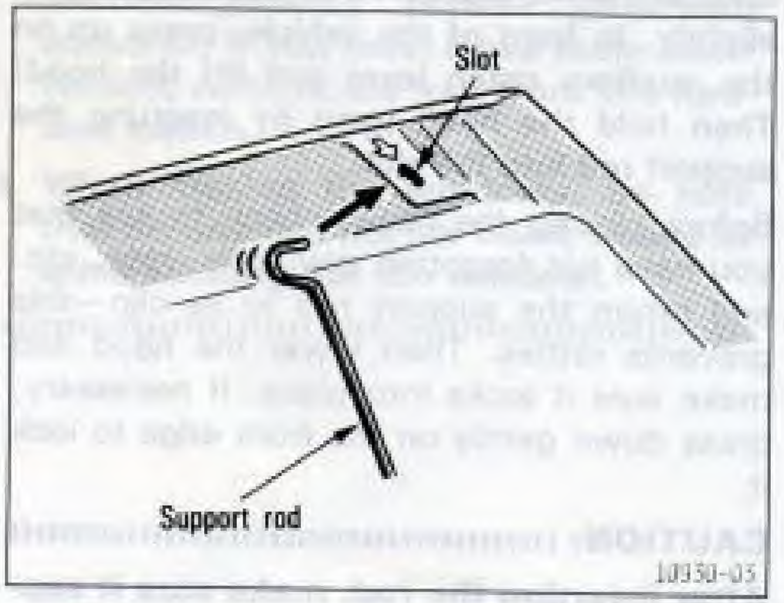

Fuel tank cap (except pick-up)

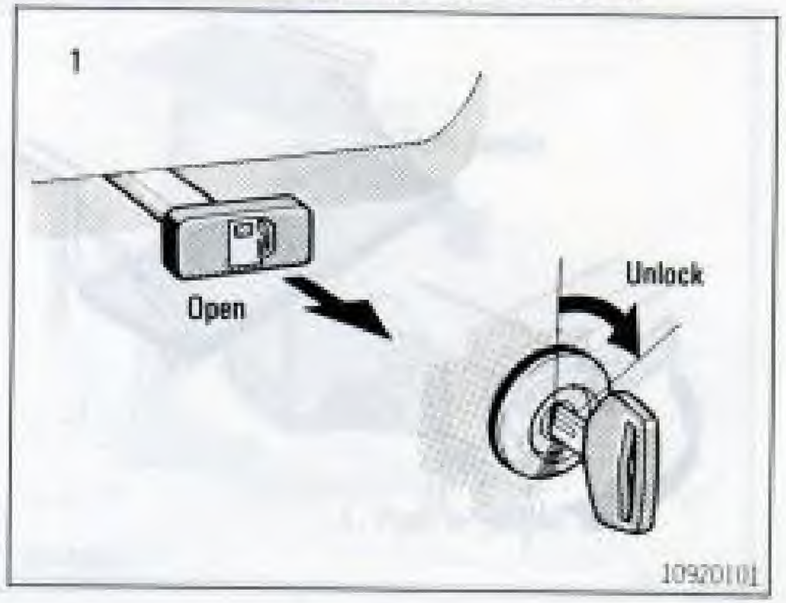

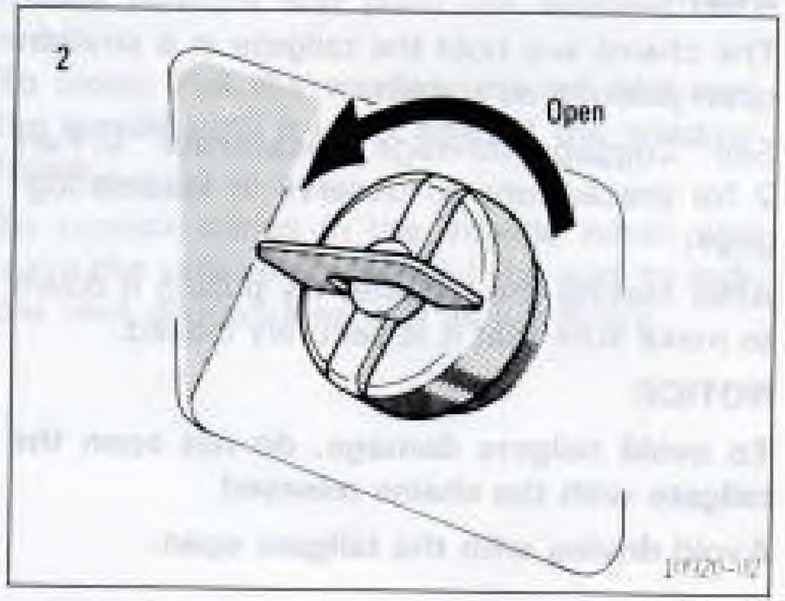

1. To open the fuel filler door, pull the handle out or unlock it with your key.

2. To remove the fuel tank cap, turn the cap slowly counterclockwise, then pause slightly before removing it.

It is not unusual to hear a slight swoosh when the cap is opened. When installing, make sure the tabs in the cap are properly aligned with the cutouts in the tank opening.

CAUTION:

- **Do not smoke, cause sparks or allow open flames when refuelling. The fumes are inflammable.**
- **When opening the cap, do not remove the cap quickly. Fuel may be under pressure and spray out of the fuel filler neck under hot weather conditions, etc., which may cause injury.**
- **Make sure that the cap is tightened securely to prevent fuel spillage in case of an accident.**
- **Use only a genuine Toyota fuel tank cap for replacement. It has a built-in check valve.**

Fuel tank cap (pick-up)

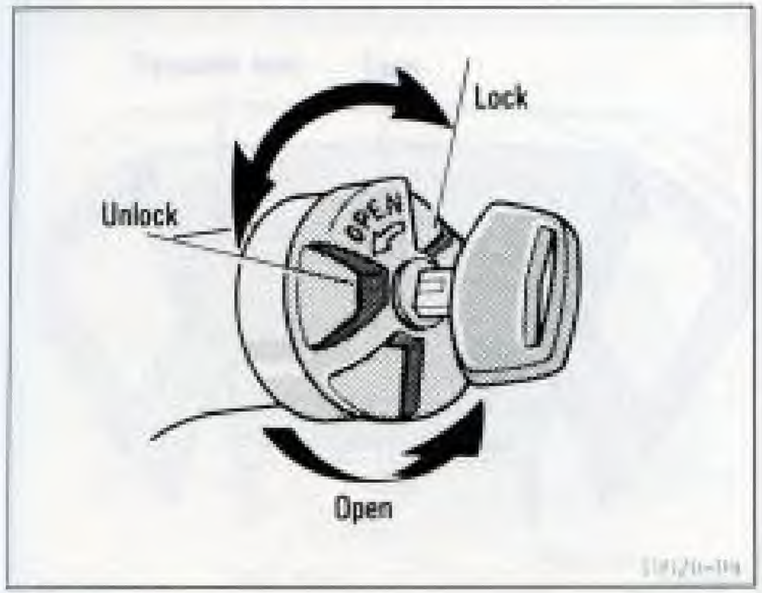

To remove the fuel tank cap, turn the cap slowly counterclockwise, then pause slightly before removing it.

If the fuel tank cap is locked, unlock it with your key.

It is not unusual to hear a slight swoosh when the cap is opened. When installing, make sure the tabs in the cap are properly aligned with the cutouts in the tank opening.

CAUTION:

- **Do not smoke, cause sparks or allow open flames when refuelling. The fumes are inflammable.**
- **When opening the cap, do not remove the cap quickly. Fuel may be under pressure and spray out of the fuel filler neck under hot weather conditions, etc., which may cause injury.**
- **Make sure that the cap is tightened securely to prevent fuel spillage in case of an accident.**
- **Use only a genuine Toyota fuel tank cap for replacement. It has a built-in check valve.**

Electric moon roof

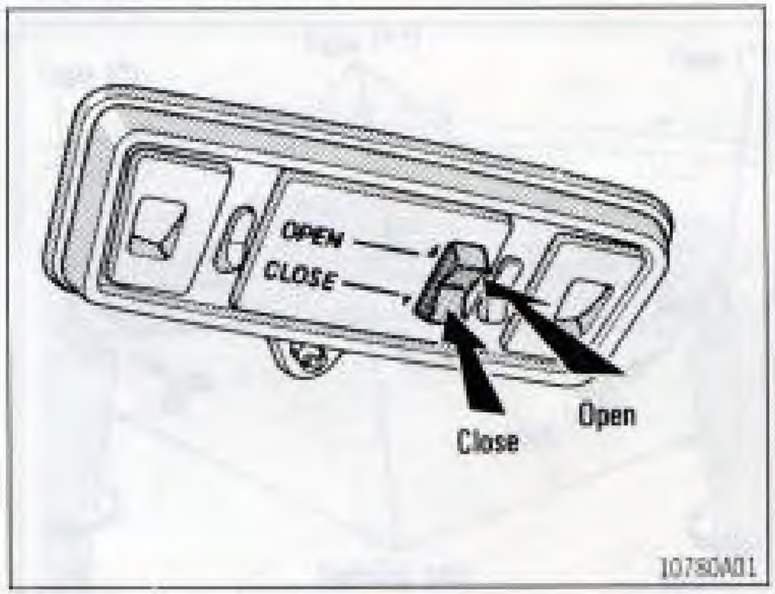

To open the moon roof, push the switch in on the "OPEN" side. To close it, push the switch in on the "CLOSE" side.

The ignition key must be in the "ON" position.

The moon roof will move while the switch is being pushed and stop when released. However, as a precaution when closing, it stops at the three-quarters closed position before fully closing. Therefore, release the switch and then push it again to close it completely.

If the moon roof does not close, see Part 4 for emergency information.

The sun shade can be opened or closed manually. However, if you open the moon roof, the sun shade will be opened together with the moon roof.

CAUTION:

- **Do not stick your head, arms, etc. out of the opening while the vehicle is moving.**
- **Do not sit on top of the vehicle around the opening.**

Fully-opened style (FRP TOP and soft-top)—

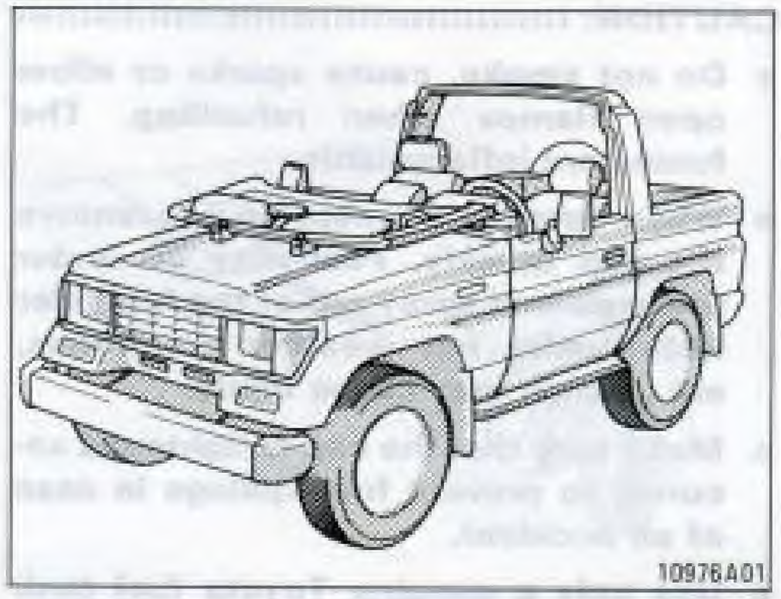

You can enjoy driving in fully-opened style by the following procedures.

SOFT-TOP

(a) Removing tarpaulin
(b) Removing tarpaulin bows
(c) Removing back door frames
(d) Removing rear gate
(e) Removing door frames
(f) Folding windshield frame

FRP TOP

(c) Removing back door frames
(g) Removing detachable top
(e) Removing door frames
(f) Folding windshield frame

NOTICE:

Do not drive with only the detachable top removed, as the back door will be damaged.

(a) Removing tarpaulin (soft-top)

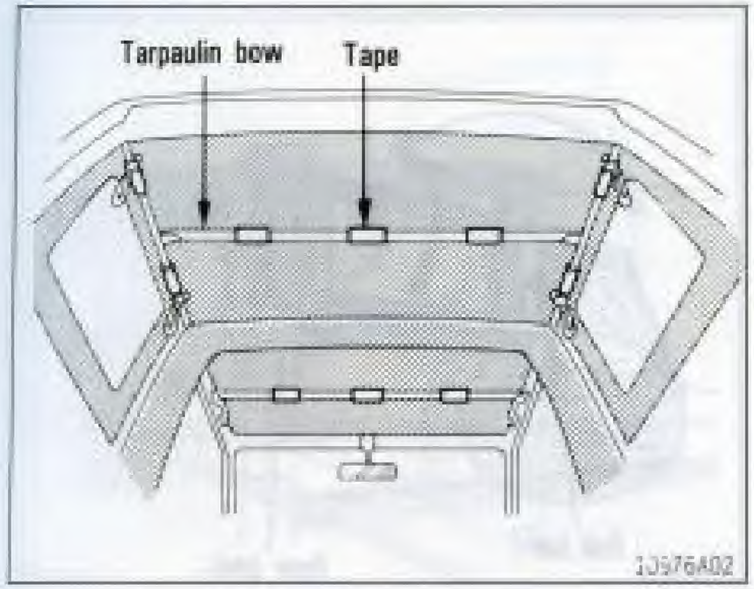

1. Peel the strips of the tape around the tarpaulin bows.

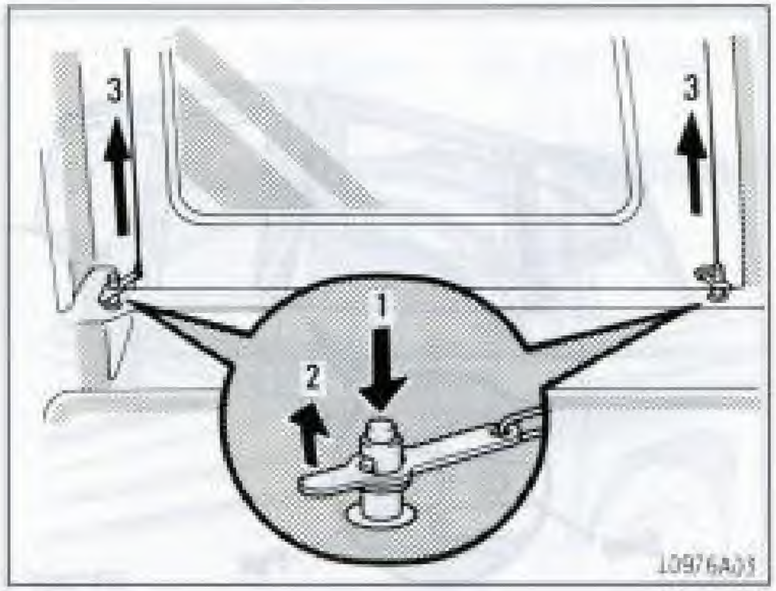

2. Release the cocks and unzip the zippers.

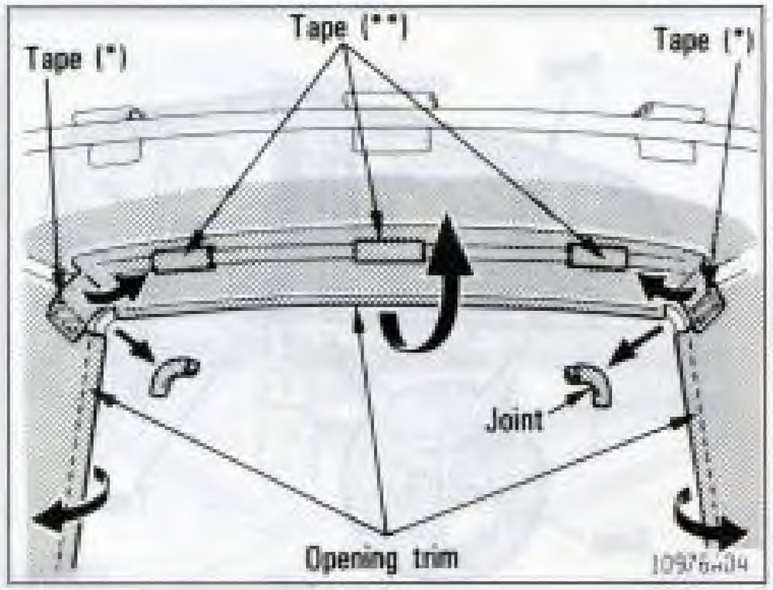

3. Peel the strips of the tape (*) above the back door.

4. Remove the opening trim corner joints.

5. Peel the opening trim and the strips of the tape (**).

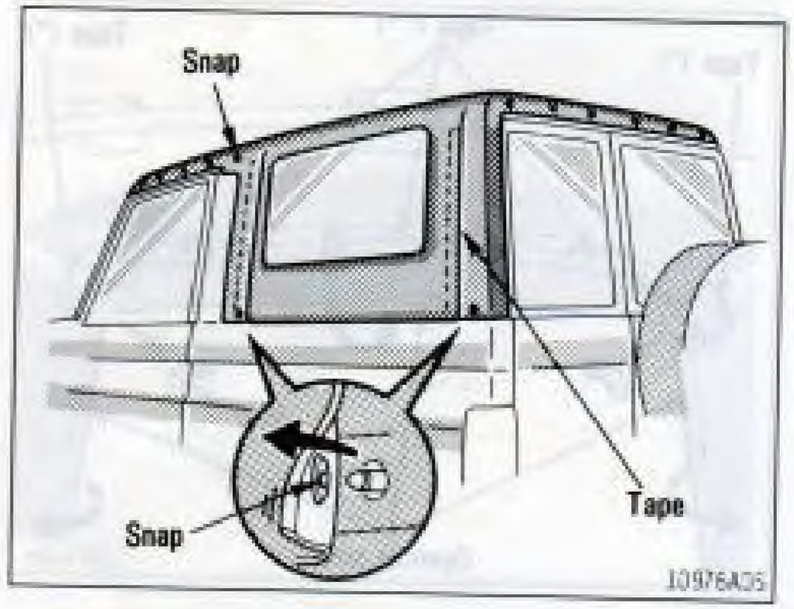

6. Unhook the snaps and peel the strips of the tape.

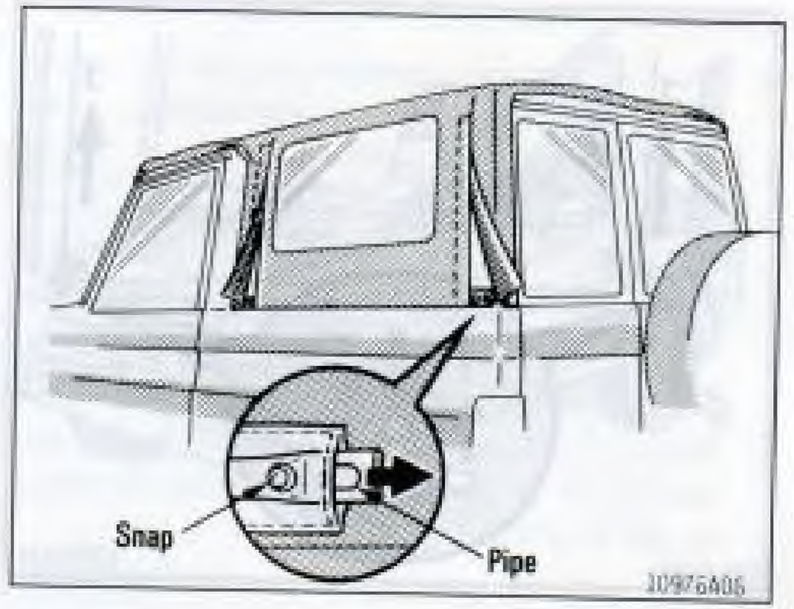

7. Unhook the snaps for the sidewall retaining pipes of the tarpaulin and pull out the pipes rearward.

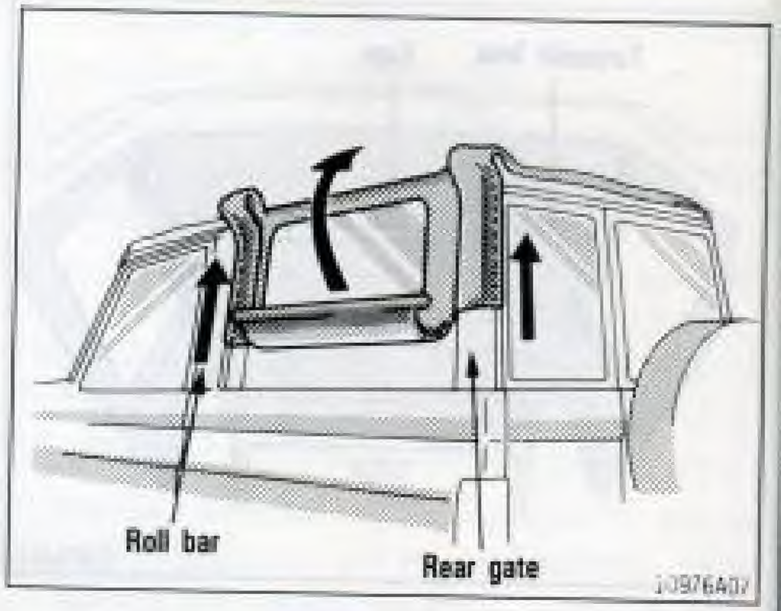

8. Slide up the tarpaulin from the roll bar and rear gate.

9. Flip up the sidewalls of the tarpaulin as shown.

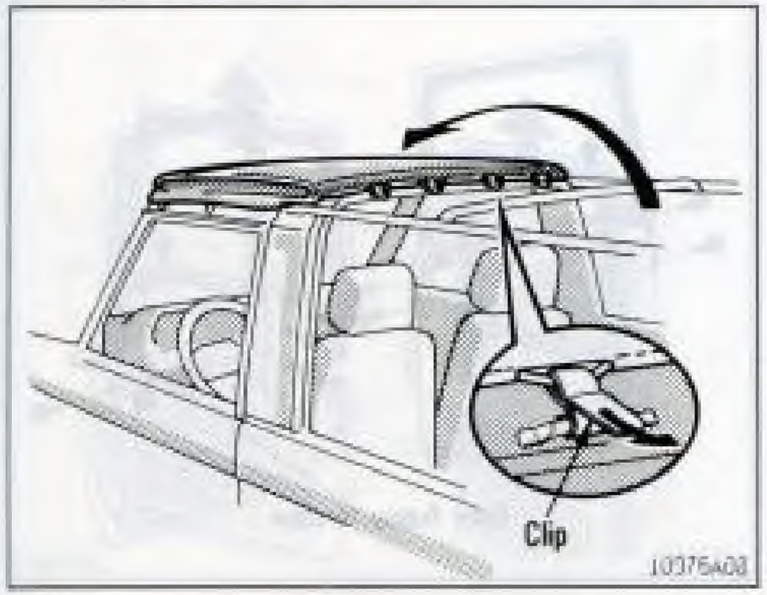

10. Flip the folded tarpaulin forward.
11. Disconnet the clips from the roll bar.

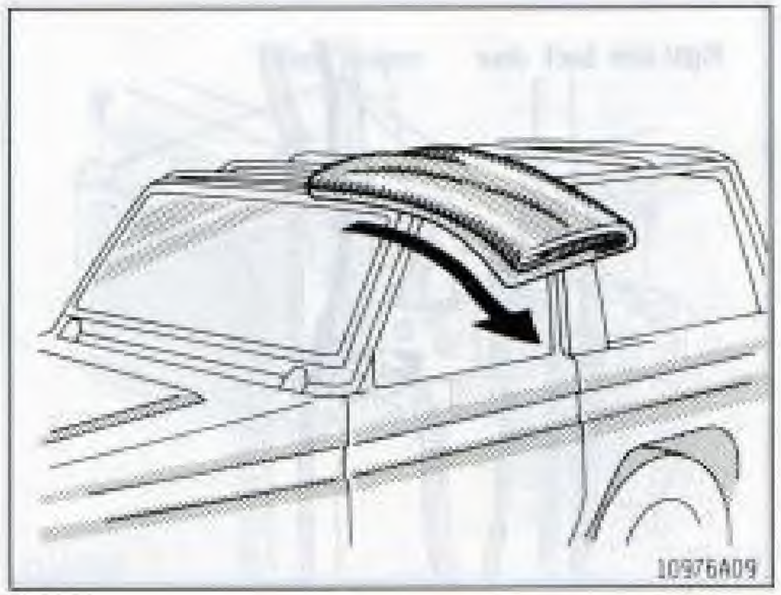

12. Remove the tarpaulin sliding it toward the vehicle right side or left side.

To reinstall the tarpaulin, follow the reverse sequence of removal procedure.

(b) Removing tarpaulin bows (soft-top)

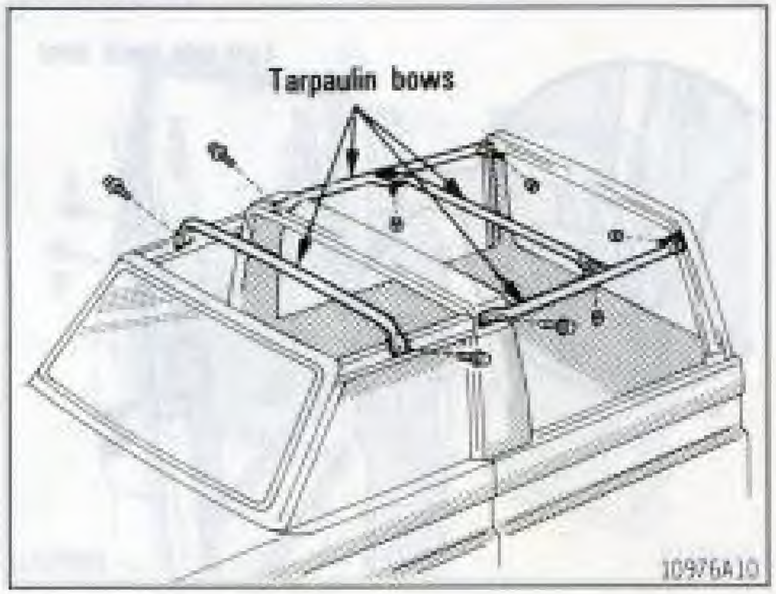

Remove the tarpaulin bow retaining nuts and bolts with a wrench.

(c) Removing back door frames

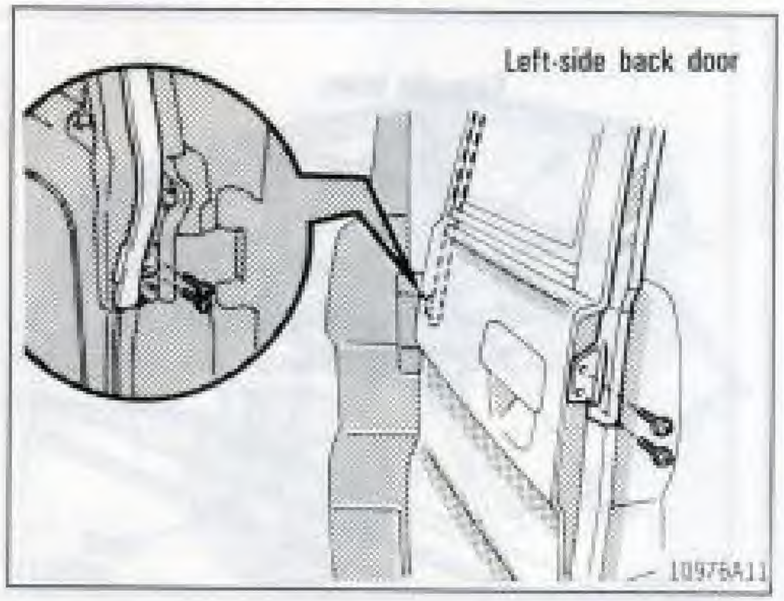

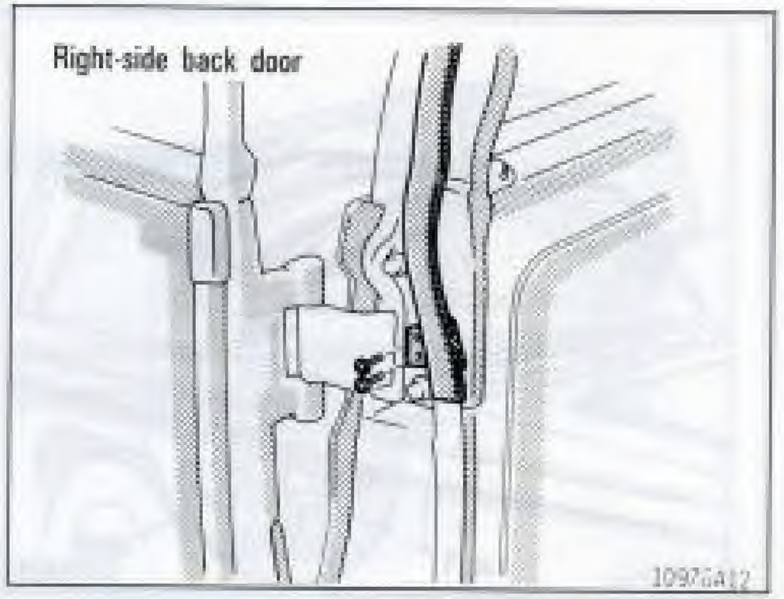

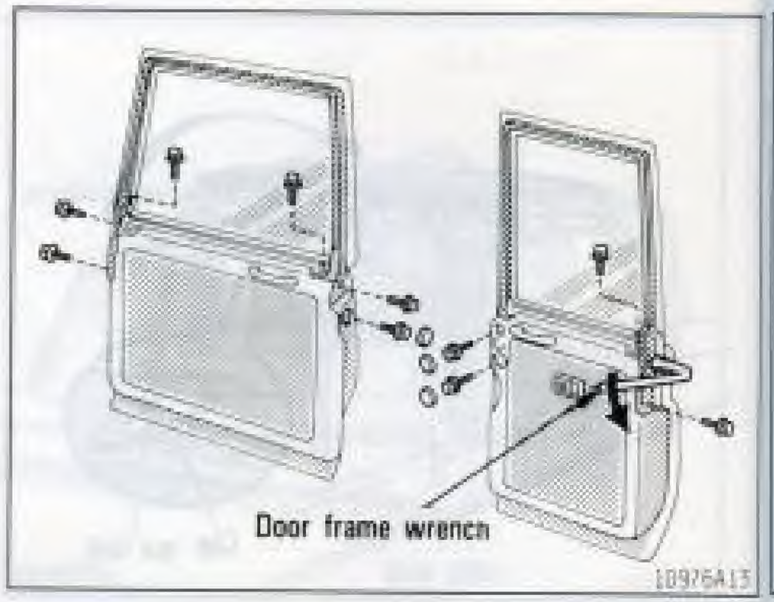

1. Remove the weatherstrip retaining screws with a screwdriver.

Be careful not to damage the weatherstrips.

2. Remove the hole plugs.

3. Remove the back door frame retaining bolts with the door frame wrench.

The door frame wrench is in the tool bag.

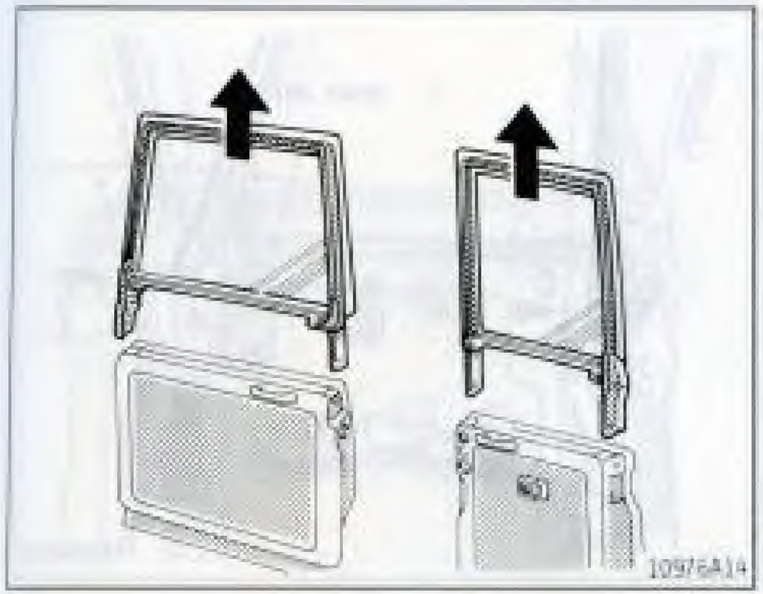

4. Remove the back door frames while pulling them upward.

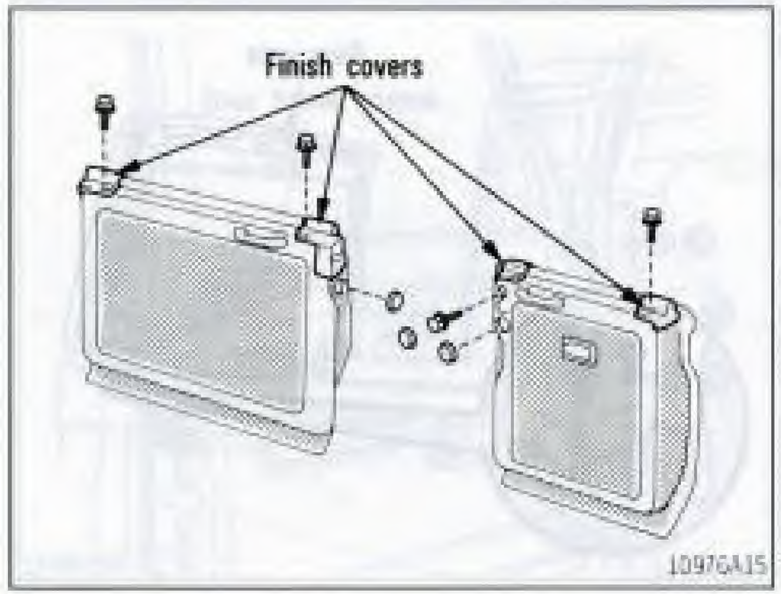

5. Install the finish covers with the back door frame retaining bolts using the wrench.

The finish cover bag can be found in the glovebox.

6. Reinstall the hole plugs.

Keep the back door frames at safe place so that the glasses do not break.

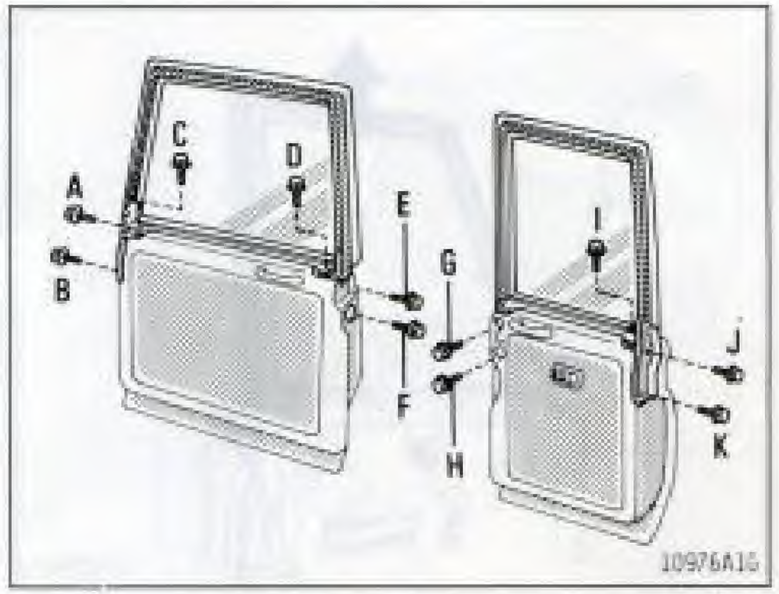

To reinstall the back door frames, follow the reverse sequence of removal procedure.

When inserting the back door frames into the door panels, be careful not to damage the weatherstrips.

Observe the following steps when reinstalling the back door frame retaining bolts.

RIGHT-SIDE BACK DOOR

1. Install the back door frame retaining bolts except for the bolt "F" by turning them clockwise about 3-turns with a hand.

2. Temporarily tighten the retaining bolt "F" with the wrench.

3. Tighten the retaining bolt "C" and "D" .

4. Tighten other retaining bolts.

LEFT-SIDE BACK DOOR

1. Install the back door frame retaining bolt "I", "J" and "K" by turning them clockwise about 3-turns with a hand.
2. Temporarily tighten the retaining bolt "G" and "H" with the wrench.
3. Tighten the retaining bolt "G" and "I".
4. Tighten other retaining bolts.

(d) Removing rear gate (soft-top)

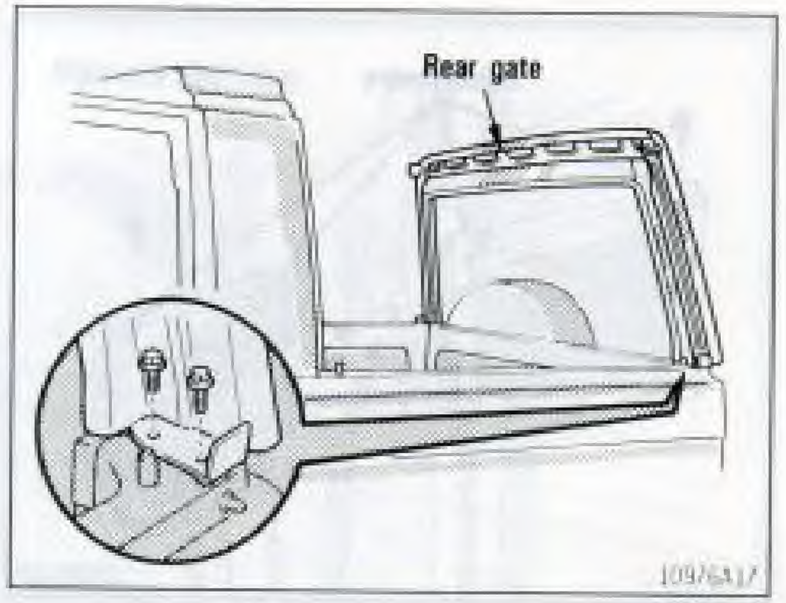

Remove the rear gate retaining bolts with a wrench.

(e) Removing door frames

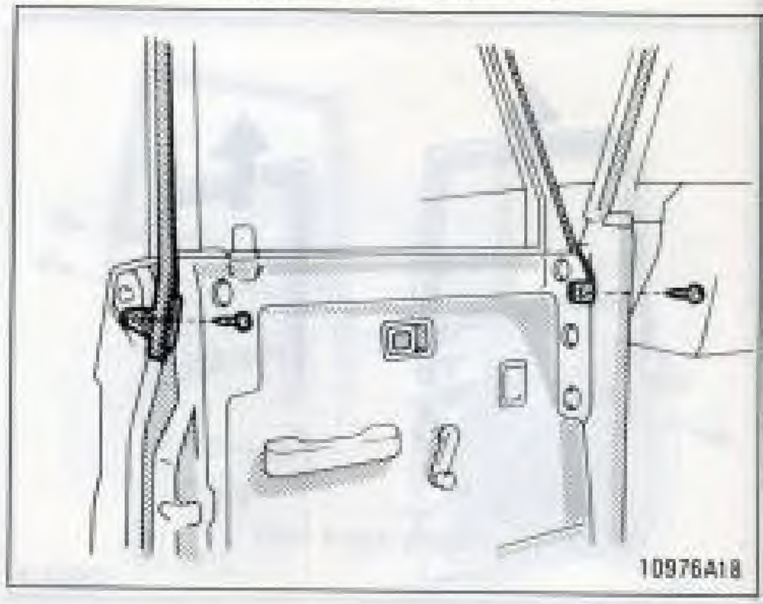

1. Open a window completely.
2. Remove the weatherstrip retaining screws with a screwdriver.

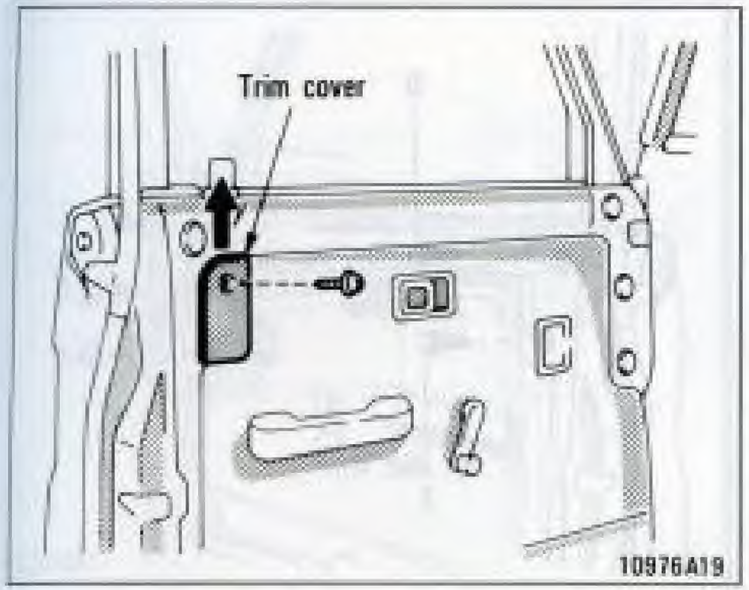

3. Remove the trim cover retaining screw with a screwdriver.

4. Remove the trim cover while pulling it up.

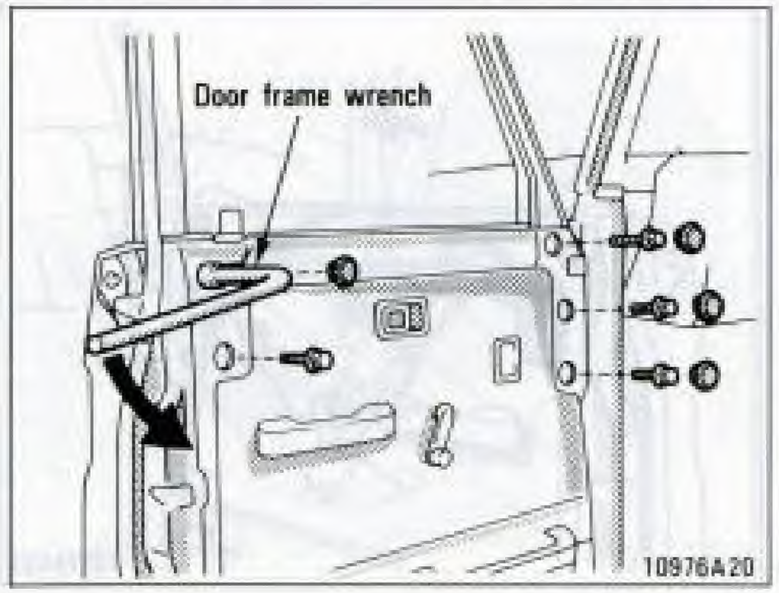

5. Remove the hole plugs.

6. Remove the door frame retaining bolts with the door frame wrench.

The door frame wrench is in the tool bag.

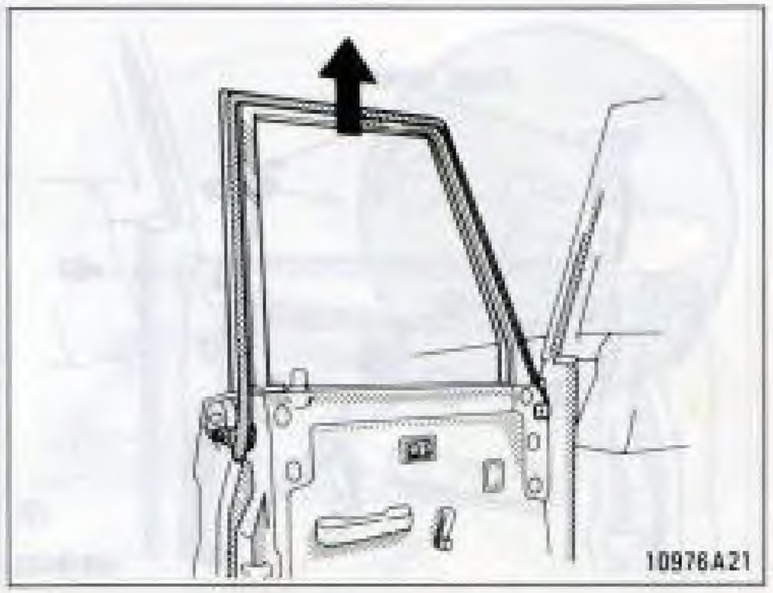

7. Remove the door frame while pulling it upward.

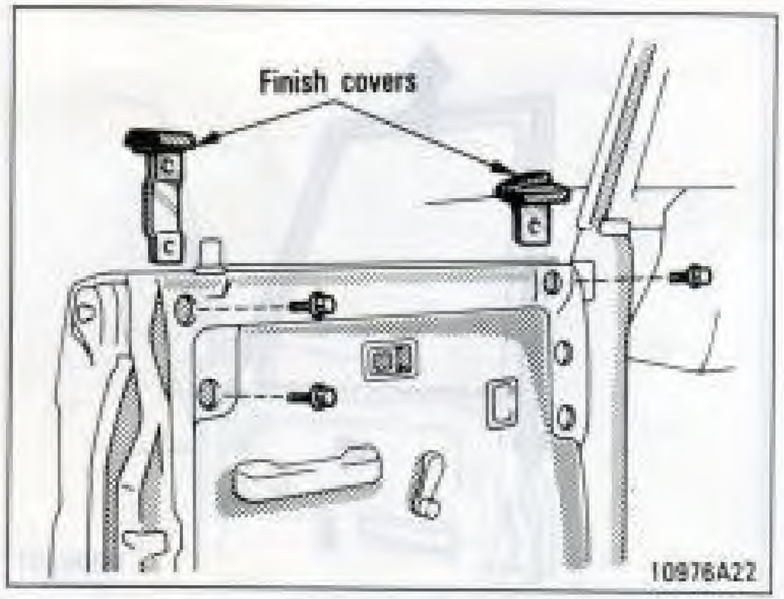

8. Install the finish covers with the door frame retaining bolts using the wrench.

The finish cover bag can be found in the glovebox.

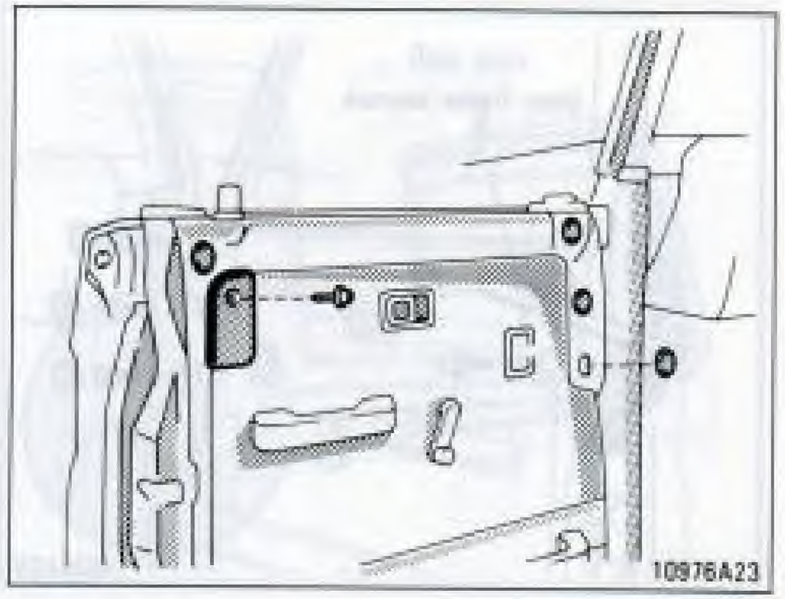

9. Reinstall the trim cover and hole plugs.

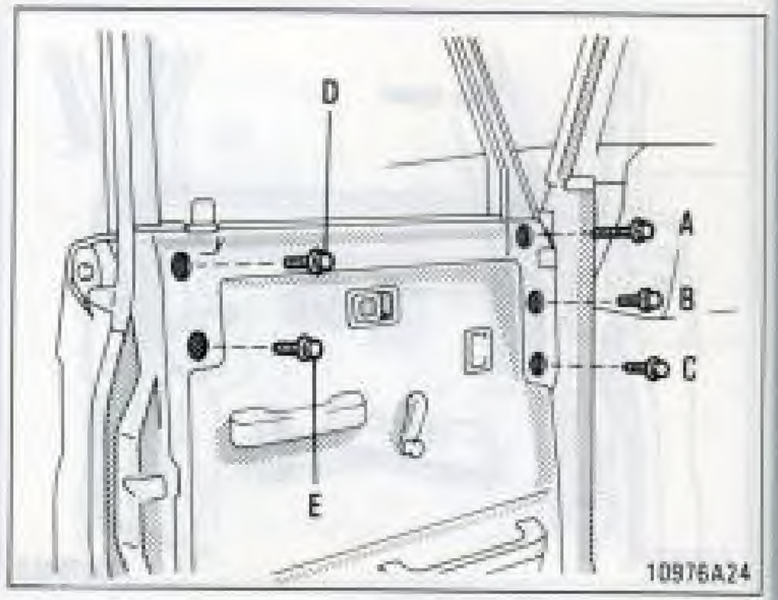

To reinstall the door frames, follow the reverse sequence of removal procedure. Make sure that the weatherstrips are properly located.

Observe the following steps when reinstalling the door frame retaining bolts. Installing into other holes may result in the door glass damaged.

1. Align the holes in the door panel with the holes in the door frame.

2. Temporarily tighten the longest door frame retaining bolt "A".

3. Tighten the retaining bolt "D".

4. Tighten in the order of the retaining bolt "A","C","B" and "E".

(f) Folding windshield frame

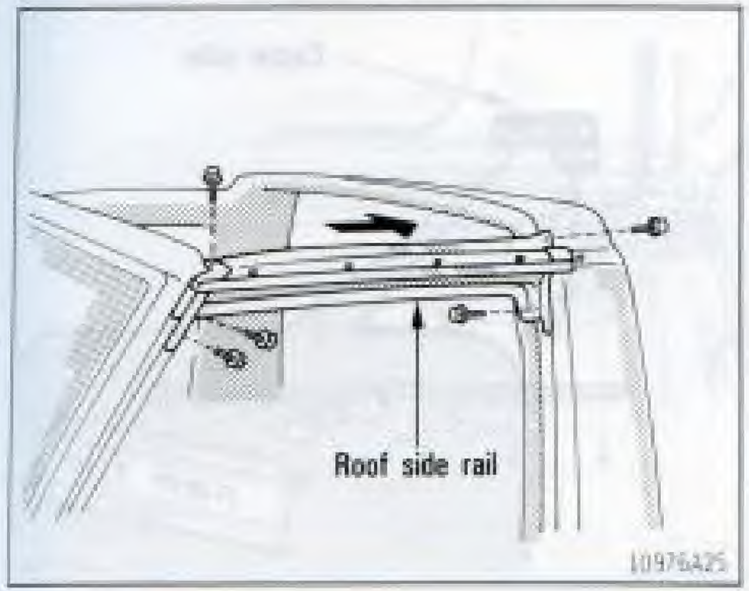

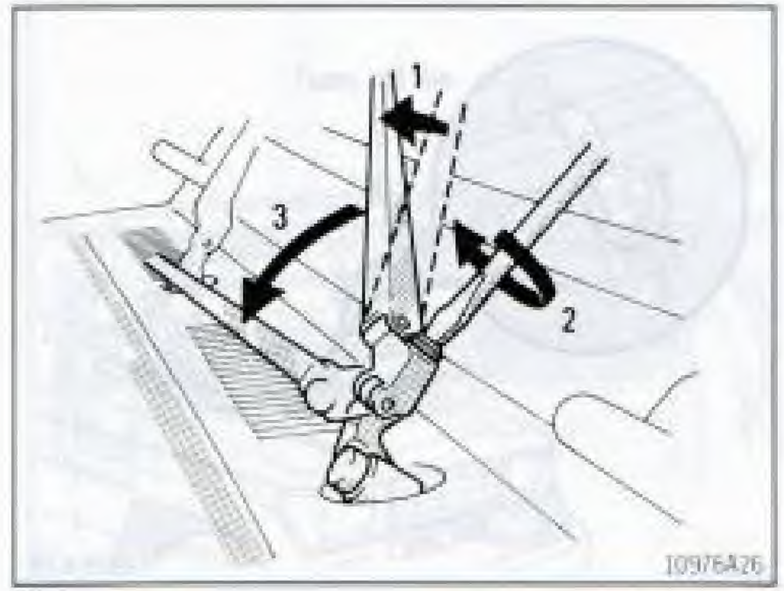

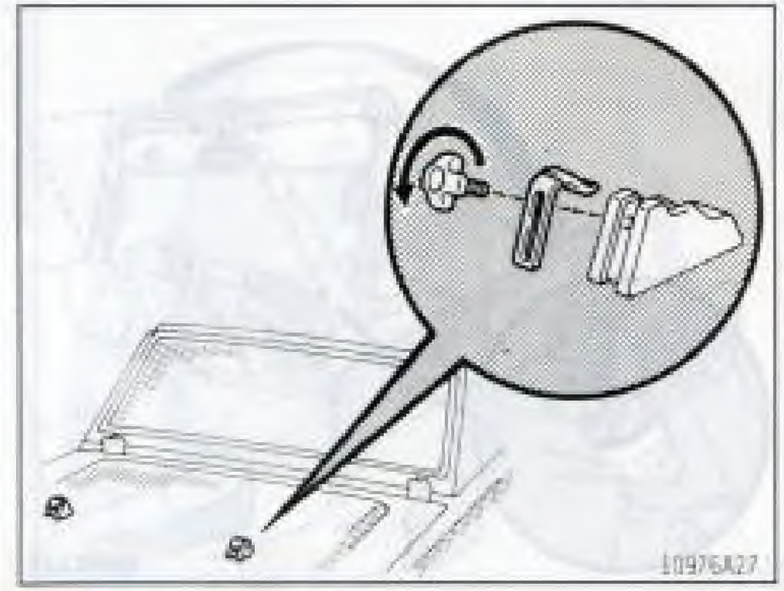

1. Retract the antenna completely, if installed.
2. Remove the roof side rail retaining bolts.
3. Remove the roof side rails while pulling them rearward.
4. Loosen the wiper arm retaining screws while pulling the wiper arms frontward.
5. Fold wiper arms frontward as shown.
6. Remove the bolts and brackets from the windshield frame retaining holders on the hood with a hand.

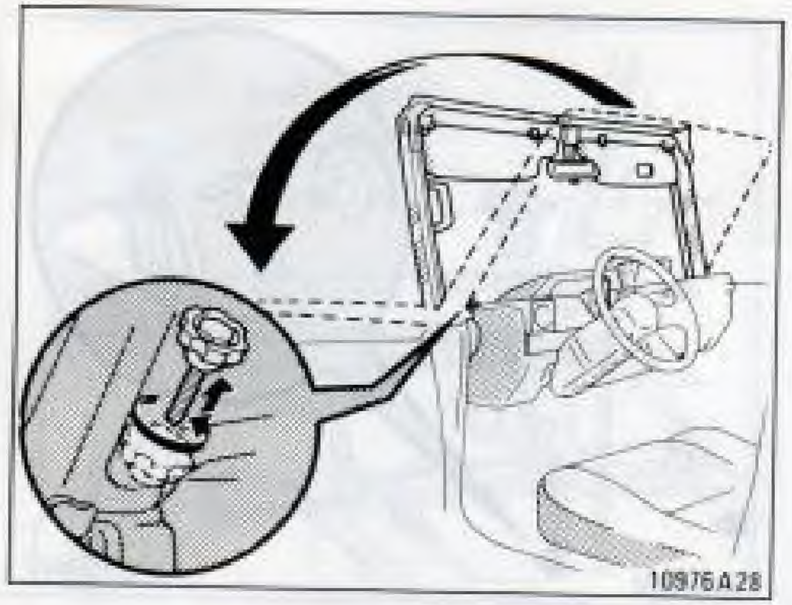

7. Remove the windshield frame retaining bolts with a wrench.

8. Slowly fold the windshield frame frontward.

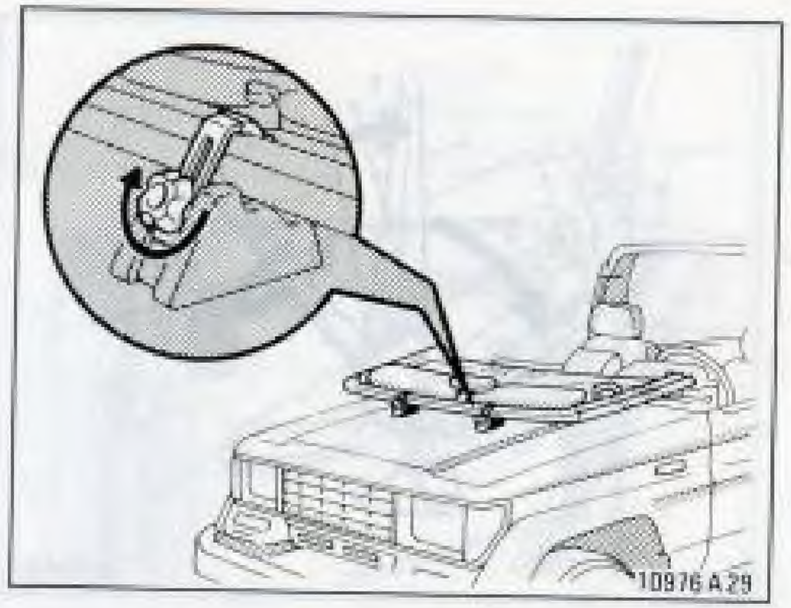

9. Lock the windshield frame with the bolts and brackets of the retaining holders.

To reinstall the windshield frame, follow the reverse sequence of removal procedure.

When reinstalling the roof side rails, be careful not to damage the weatherstrips.

(g) Removing detachable top (FRP TOP)

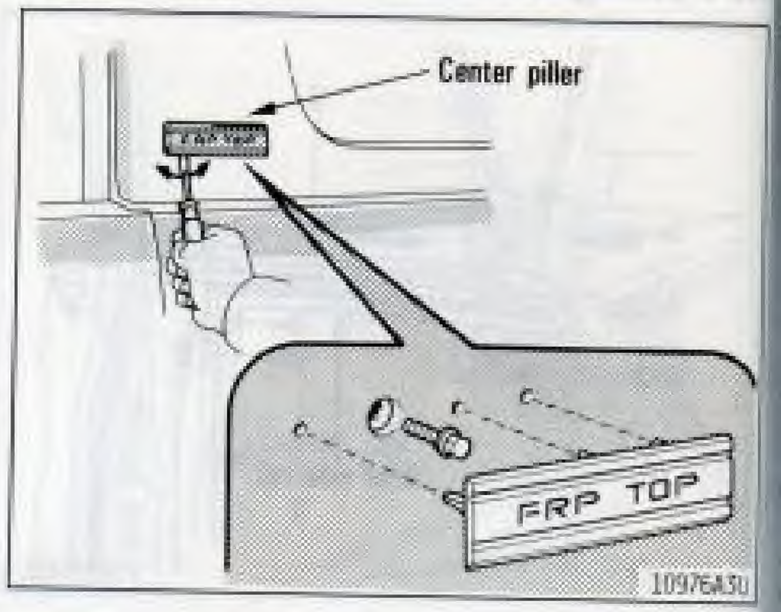

1. Remove the ornaments on the center pillars with a screwdriver.

Be careful not to scratch the surface of the detachable top.

2. Remove the center pillar retaining bolts with a wrench.

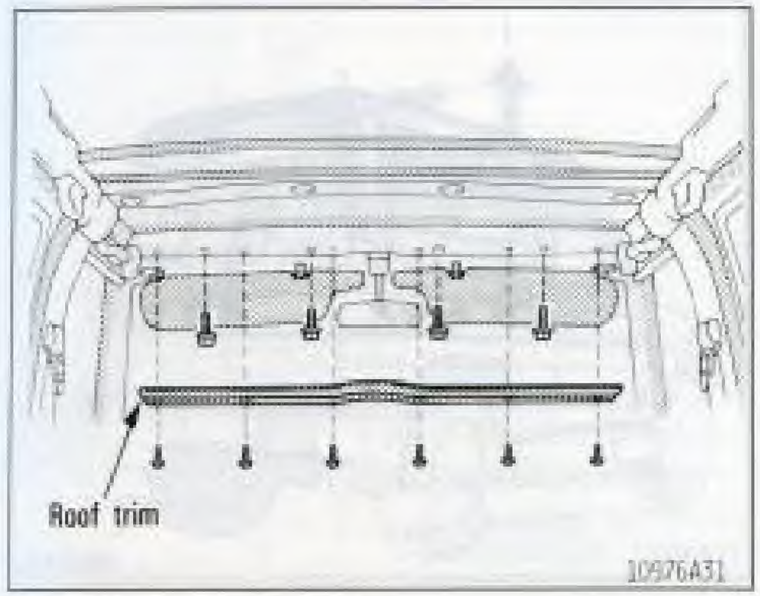

3. Loosen the roof trim retaining screws with a screwdriver and remove the roof trim.

4. Remove the roof retaining bolts with a wrench.

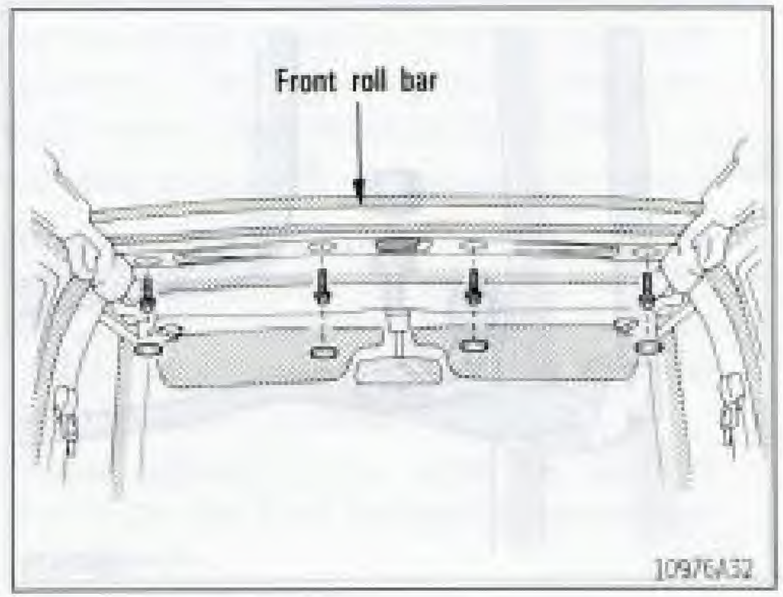

5. Remove the hole plugs from the front roll bar.

6. Remove the roof retaining bolts with a wrench.

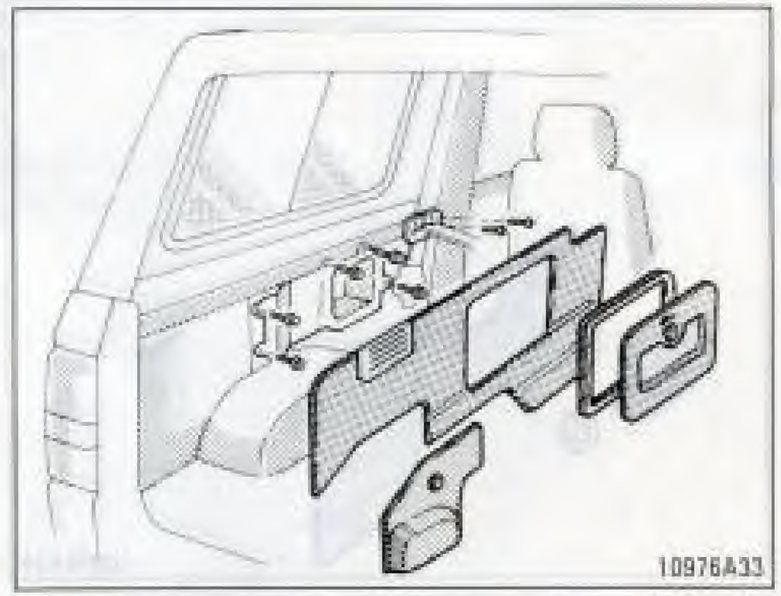

7. Remove the side trims.

Part 1
OPERATION OF INSTRUMENTS AND CONTROLS—

Chapter 1-3
Seats, Seat belts, Steering wheel and Mirrors

- Front seats
- Rear seats
- Headrests
- Seat belts
- Tilt steering wheel
- Anti-glare inside rear view mirror

Front seats—
—Seat adjustment precautions

Adjust the driver's seat so that the foot pedals, steering wheel and instrument panel controls are within easy reach of the driver.

CAUTION:

- **Adjustments should not be made while the vehicle is moving, as the seat may unexpectedly move and cause the driver to lose control of the vehicle.**
- **When adjusting the seat, be careful not to hit the seat against a passenger or luggage.**
- **After adjusting the seat position, try sliding it forward and backward to make sure it is locked in position.**
- **After adjusting the seatback, exert body pressure to make sure it is locked in position.**
- **After putting back the seat, try pushing the seat forward and rearward to make sure that it is secured in place.**

—Adjusting front seats

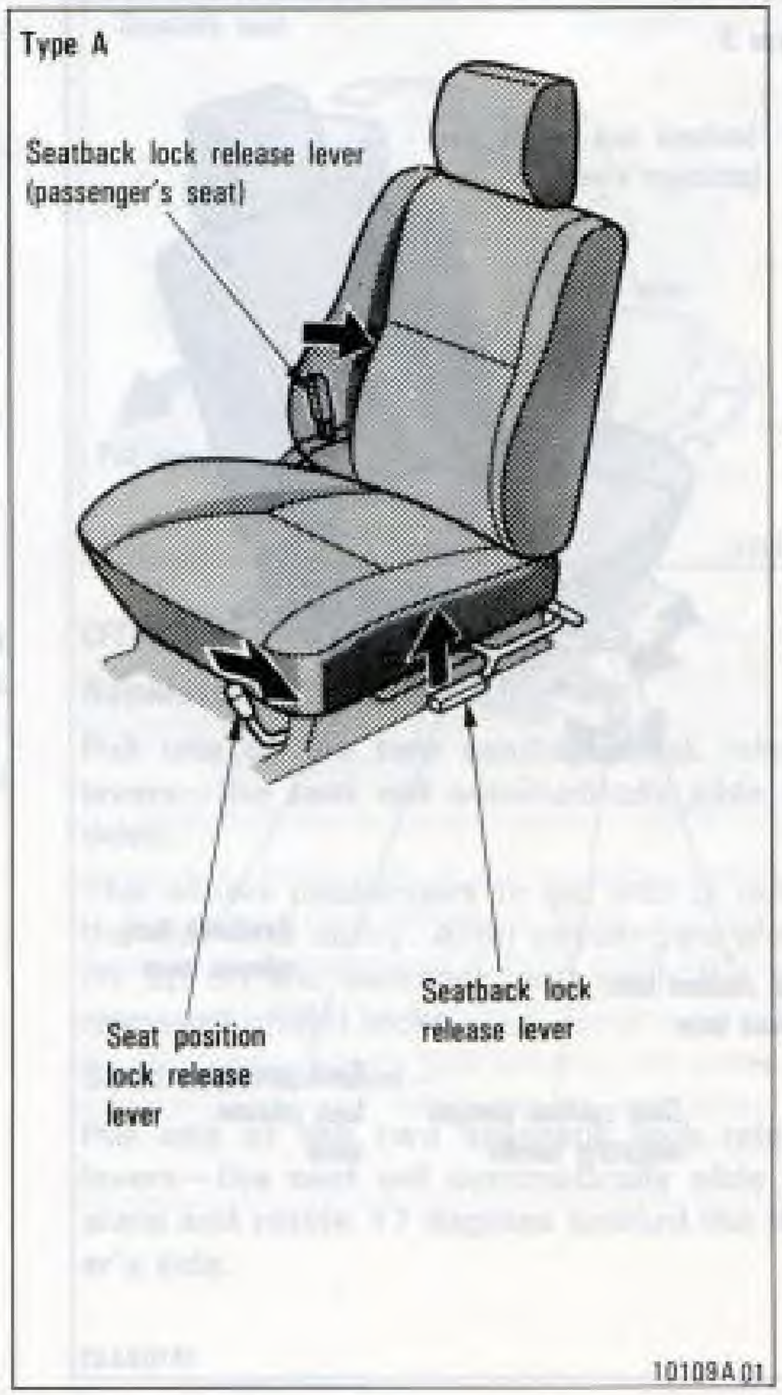

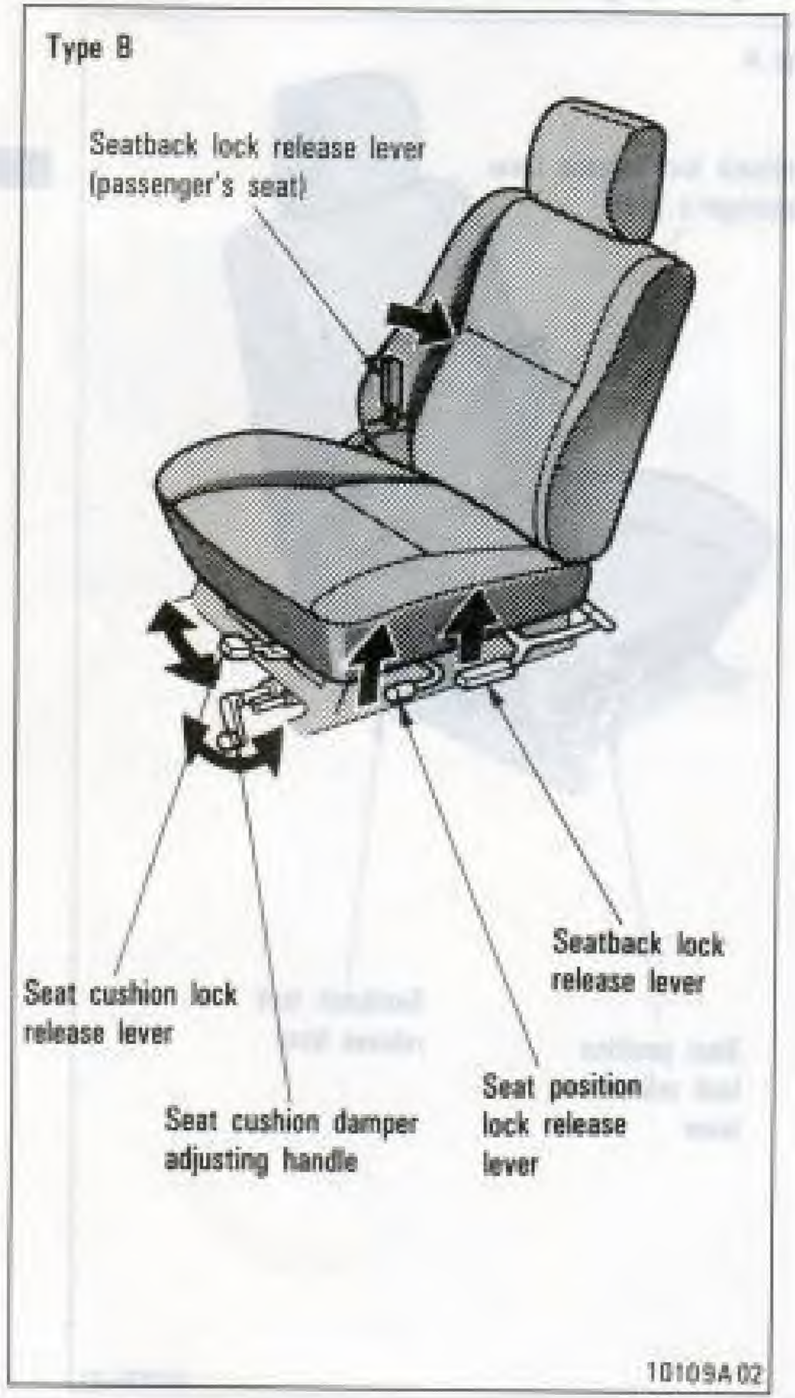

ADJUSTING SEAT POSITION

Type A—

Turn the lock release lever down. Then slide the seat to the desired position with slight body pressure and release the lever.

Type B—

Pull the lock release lever up. Then slide the seat to the desired position with slight body pressure and release the lever.

Do not place anything under the front seats. It might interfere with the seat-lock mechanism.

ADJUSTING SEATBACK ANGLE

Lean forward and pull the lock release lever. Then lean back to the desired angle and release the lever.

CAUTION:

To reduce the risk of sliding under the lap belt during a collision, avoid reclining the seatback any more than needed. The seat belts provide maximum protection when the driver and the passenger are sitting up straight and well back in the seats. If you are reclined, the lap belt may slide past your hips and apply restraint forces directly to the abdomen. Therefore, in the event of a frontal collision, the risk of personal injury may increase with increasing recline of the seatback.

ADJUSTING DAMPING EFFECT OF SEAT CUSHION (TYPE B)

To fix the seat cushion, pull the lock release lever inside. To waft the seat cushion, pull the lock release lever outside and set the needle of the weight scale to your weight.

–Moving passenger's seat for rear seat entry (2-door models)

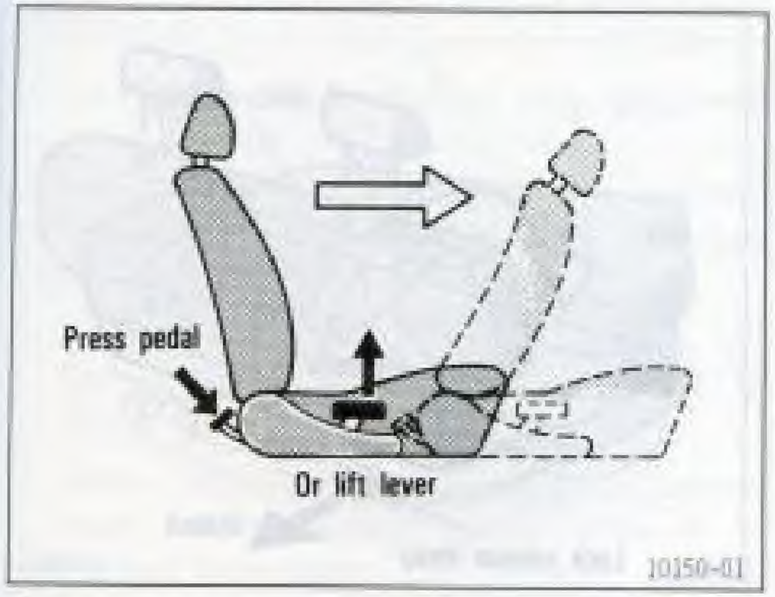

LEFT-HAND DRIVE VEHICLES AND VEHICLES FOR UNITED KINGDOM

Lift the seatback lock release lever or press the release pedal—the seat will automatically slide forward.

This allows passengers to get into or out of the rear seat easily. After passengers are in, lift up on the seatback and push the seat rearward until it locks.

CAUTION:

- **After putting back the seat, try pushing the seat forward and rearward to make sure that it is secured in place.**
- **Never allow anyone to rest their foot on the press pedal while the vehicle is moving.**

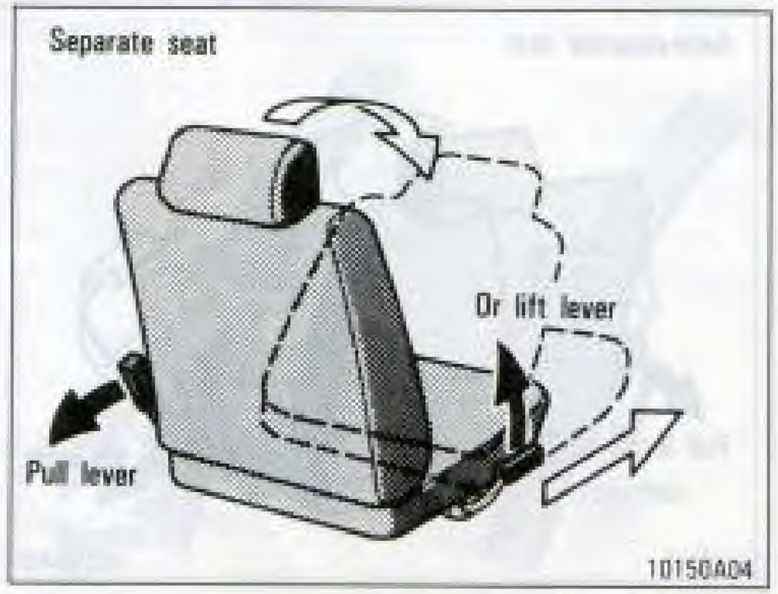

OTHERS

Separate seat—

Pull one of the two seatback lock release levers—the seat will automatically slide forward.

This allows passengers to get into or out of the rear seat easily. After passengers are in, lift up on the seatback and push the seat rearward until it locks.

Semi-separate seat—

Pull one of the two seatback lock release levers—the seat will automatically slide forward and rotate 17 degrees toward the driver's side.

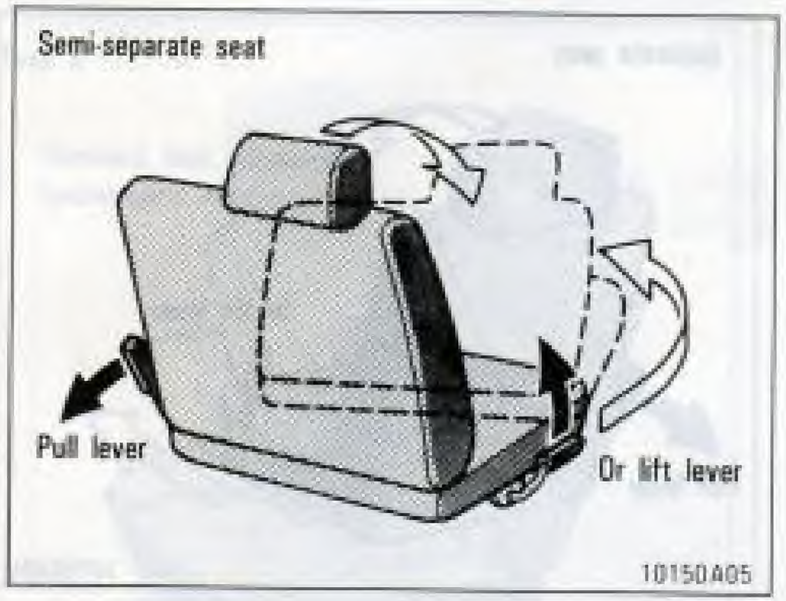

This allows passengers to get into or out of the rear seat easily. After passengers are in, return the seat until it locks into its normal position and lift up on the seatback.

CAUTION:

- **After putting back the seat, try pushing the seat forward and rearward to make sure that it is secured in place.**
- **Passengers sitting in the rear seat must be careful not to accidentally release the lever while the vehicle is in motion.**

Rear seats (2-door models)— —Rear seat precautions

CAUTION:

- **Any operations should not be made while the vehicle is moving.**
- **When returning the seat cushion to the normal position, make sure that it is securely locked by pulling it upward.**
- **When returning the seatback to the upright position, make sure that it is securely locked by pushing forward and rearward on the top of the seatback. Check that the seat belts are in position.**

Folding the seats up will enlarge the luggage compartment. See "Luggage stowage precautions" in Part 2 for precations to observe in loading luggage.

—Folding rear seat (except pick-up— transverse type)

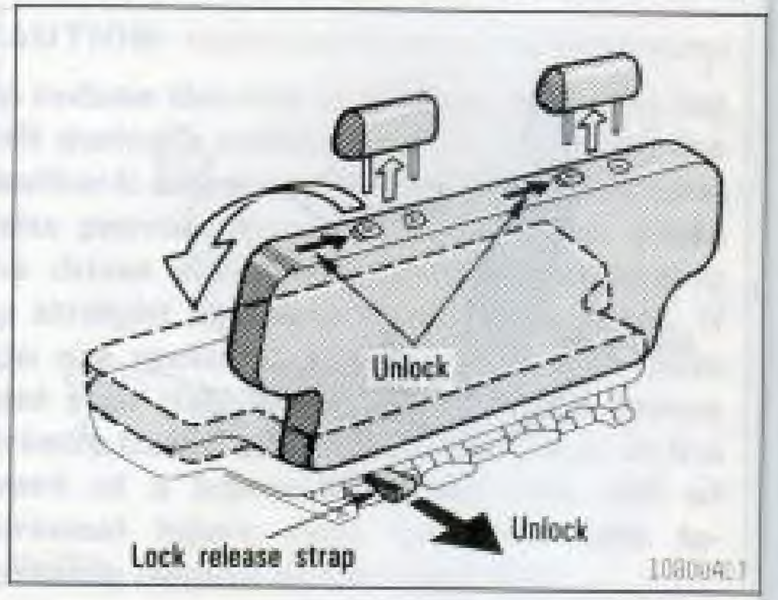

1. Remove the headrests, and pull the lock release strap to unlock and fold the seatback down.

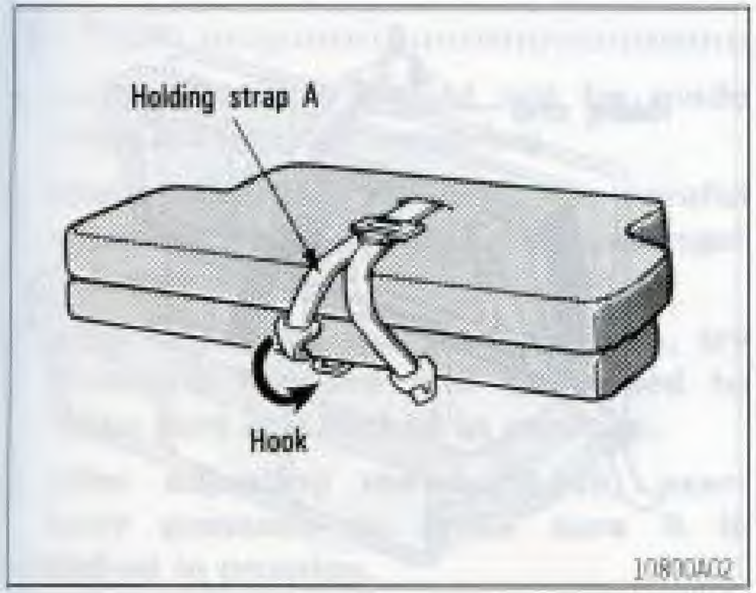

2. Hook the holding strap A to the eyelet under the seat cushion.

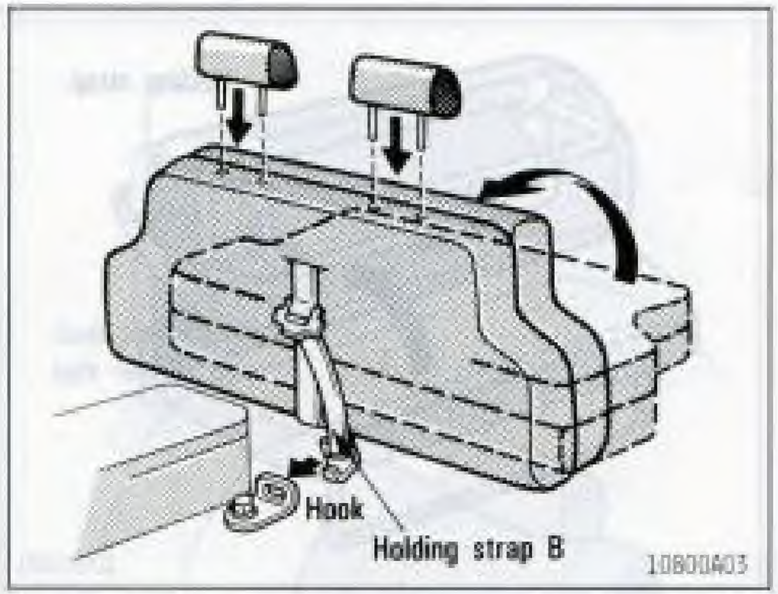

3. Pull the lock release strap again to unlock the seat cushion and swing up the whole seat. Then hook the holding strap B to the eyelet on the floor and store the headrests using the holes in the seatback.

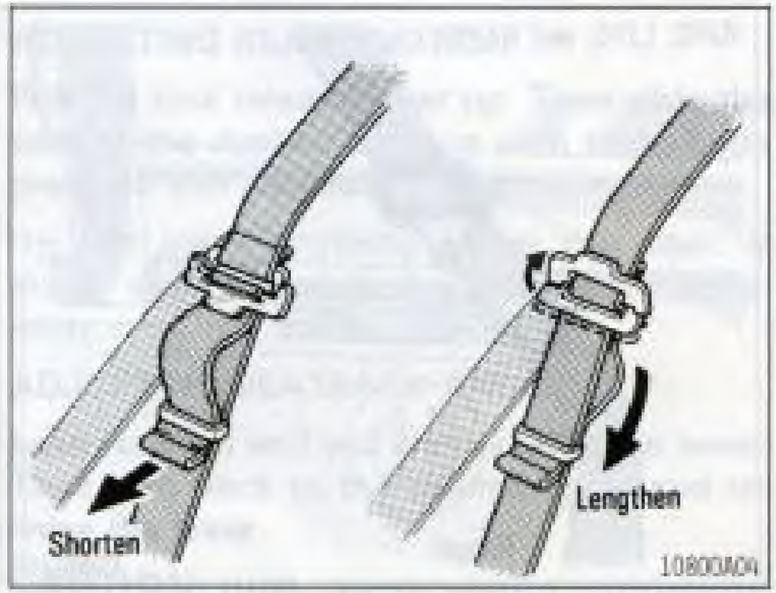

4. Adjust the strap length to secure the seat.

To shorten the strap, pull the free end; to lengthen it, turn up the tab and pull the strap.

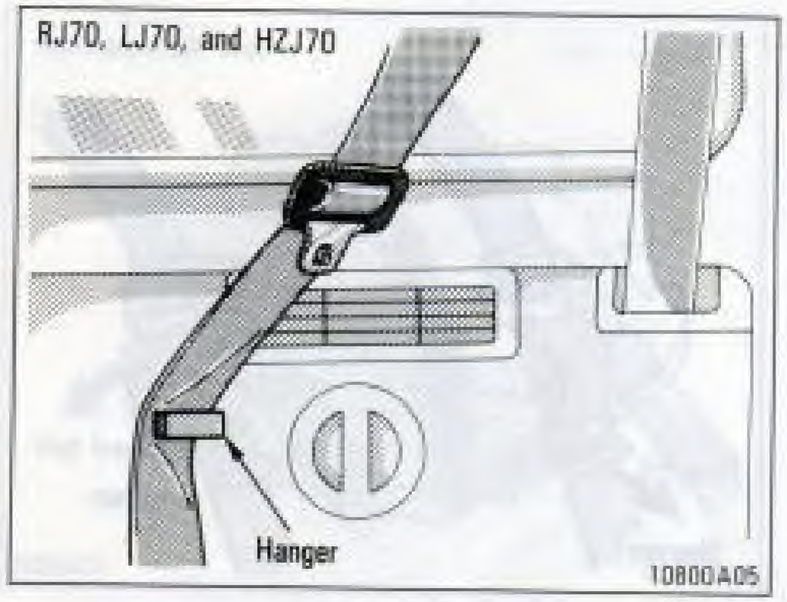

RJ70, LJ70 and HZJ70: Make sure that the lap belt passes through the hanger when folding the seatback down or returning the seatback to the upright position.

This prevents the lap belt from being damaged.

—Folding rear seats (except pick-up—longitudinal type)

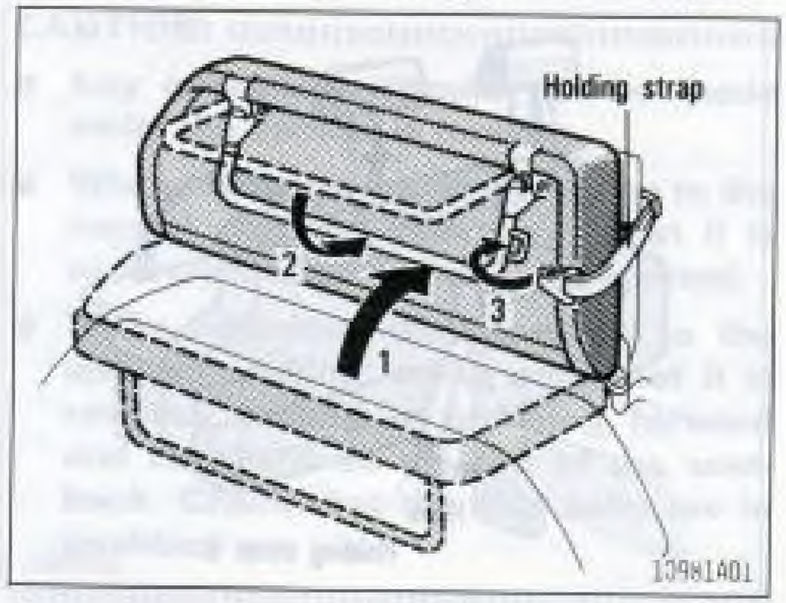

Swing the seat cushion fully up and fold the seat support down. Next, secure the seat by hooking the holding strap to the eyelet on the seat support.

—Folding rear deck seats (pick-up)

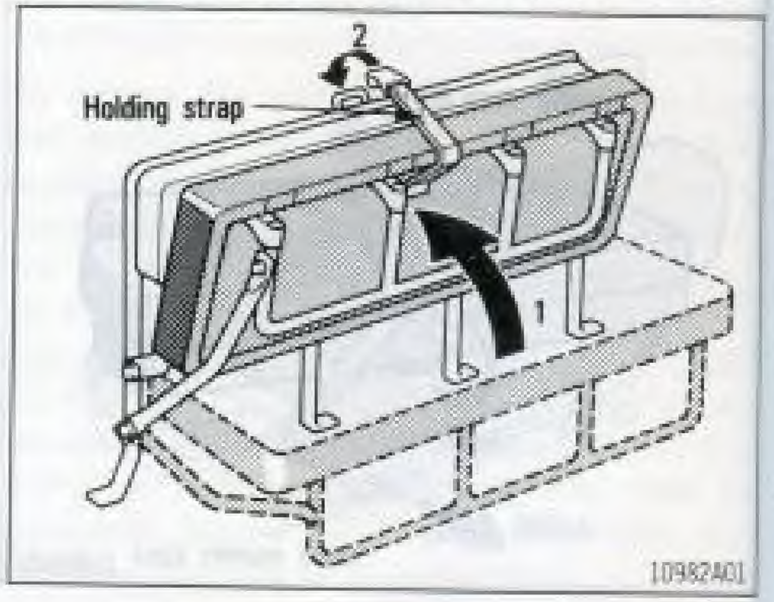

To fold the rear deck seat, swing the seat cushion fully up and hook the holding strap to the eyelet on the seatback.

Rear seats (4-door models)—
—Rear seat precautions

CAUTION:

- **Any operations should not be made while the vehicle is moving.**
- **When adjusting the seat, be careful not to hit the seat against a passenger or luggage.**
- **After adjusting the seat position, try sliding it forward and backward to make sure it is locked in position.**
- **After adjusting the seatback, exert body pressure to make sure it is locked in position.**
- **When returning the seatback to the upright position, make sure that it is securely locked by pushing forward and rearward on the top of the seatback. Check that the seat belts are in position.**
- **Do not allow passengers to ride on the flattened seat while driving; use the seat in the normal position.**

Folding the seats up will enlarge the luggage compartment. See "Luggage stowage precautions" in Part 2 for precations to observe in loading luggage.

—Adjusting rear seats

ADJUSTING SEAT POSITION

Pull the lock release lever up. Then slide the seat to the desired position with slight body pressure and release the lever.

Do not place anything under the seat. It might interfere with the seat-lock mechanism.

ADJUSTING SEATBACK ANGLE

Lean forward and pull the lock release lever. Then lean back to the desired angle and release the lever.

CAUTION:

To reduce the risk of sliding under the lap belt during a collision, avoid reclining the seatback any more than needed. The seat belts provide maximum protection when the passengers are sitting well back and straight up in the seats. If you are reclined, the lap belt may slide past your hips and apply restraint forces directly to the abdomen. Therefore, in the event of a frontal collision, the risk of personal injury may increase with increasing recline of the seatback.

—Folding second seat for third seat entry

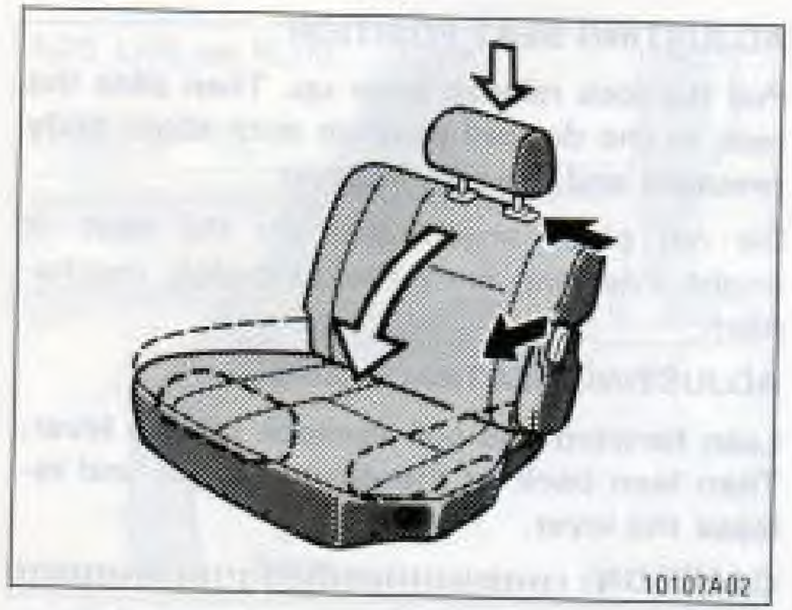

1. Move the headrest of the second seat to the lowest position if so equipped, and fold the seatback down.

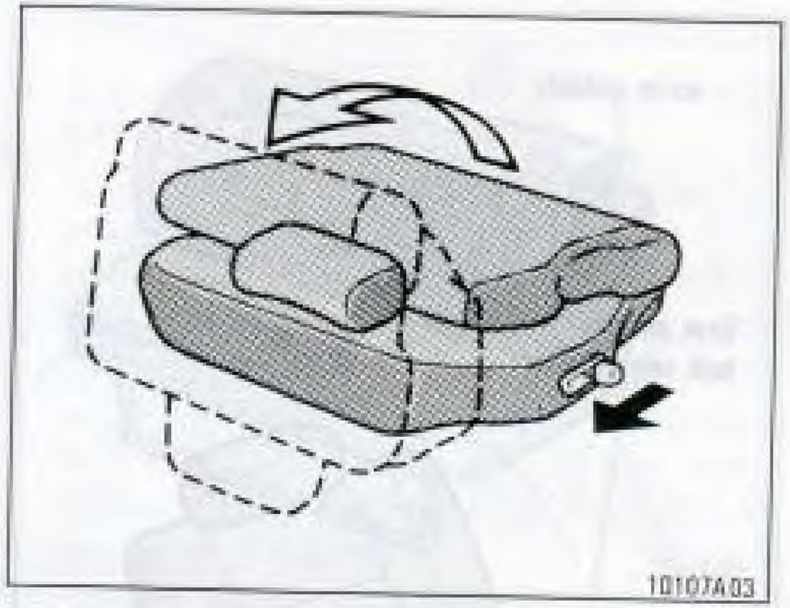

2. Unlock the seat cushion and swing the whole seat up and forward.

—Folding second seat up

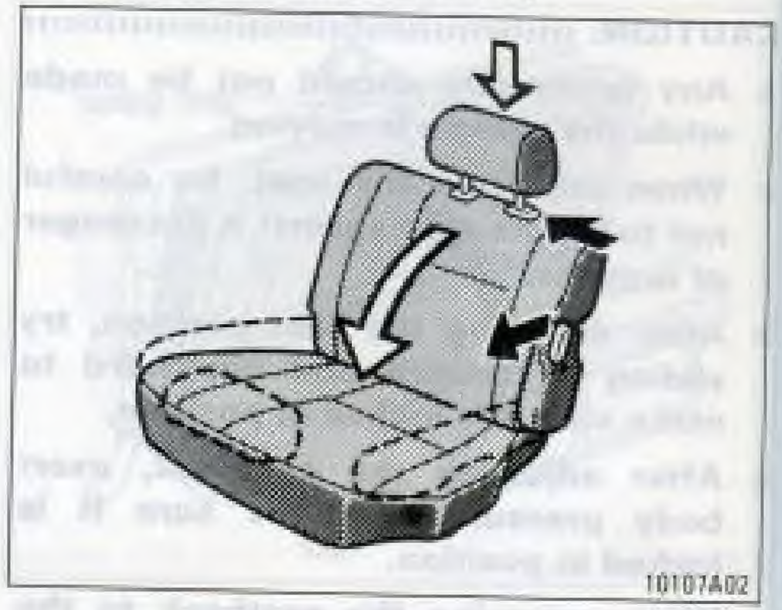

1. Move the headrest of the second seat to the lowest position if so equipped, and fold the seatback down.

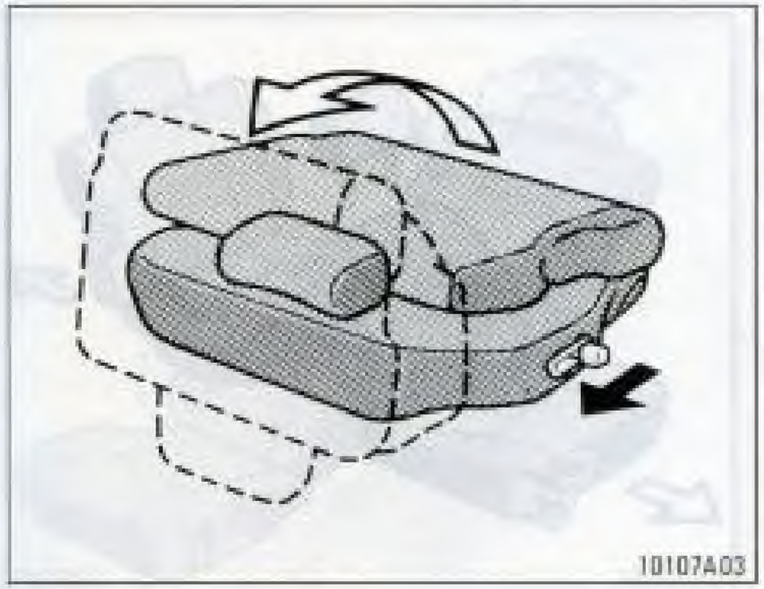

2. Unlock the seat cushion and swing the whole seat up and forward.

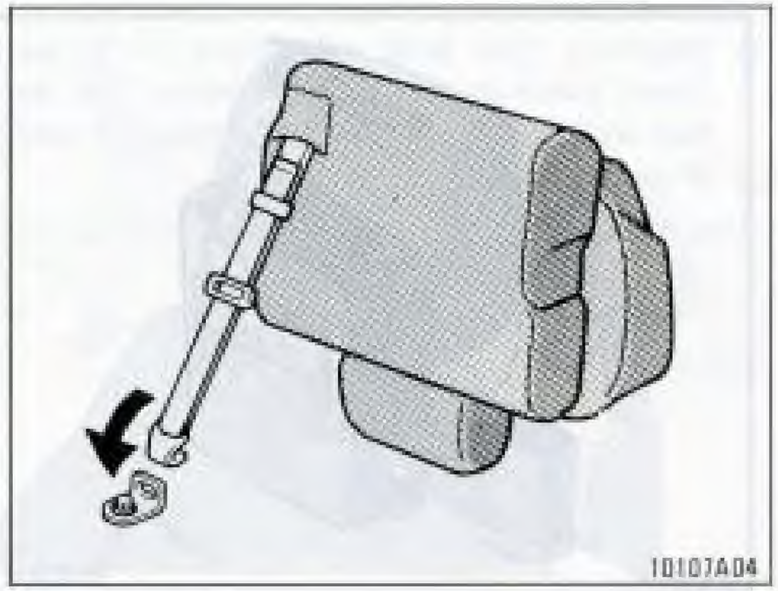

3. Secure the seat with the holding strap.

—Folding third seat up

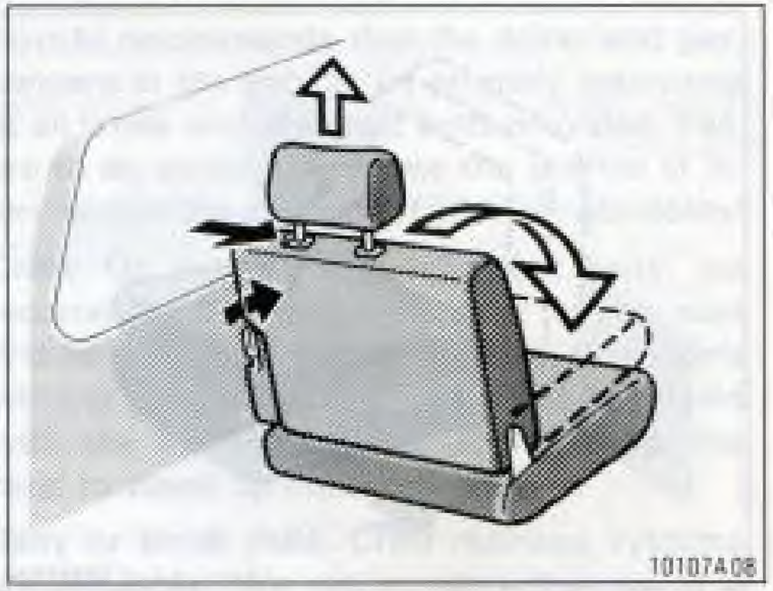

1. Remove the headrest if so equipped. Unlock the seatback and fold it down.

2. Unlock the seat cushion and swing the whole seat up and sideways.

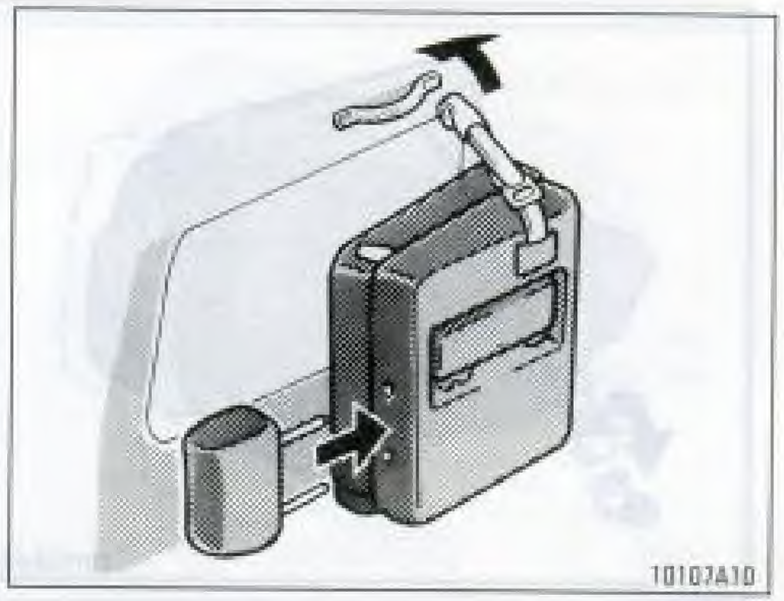

3. Secure the seat with the holding strap. Store the headrest using the headrest retaining holes in the seat cushion.

—Flattening seatbacks

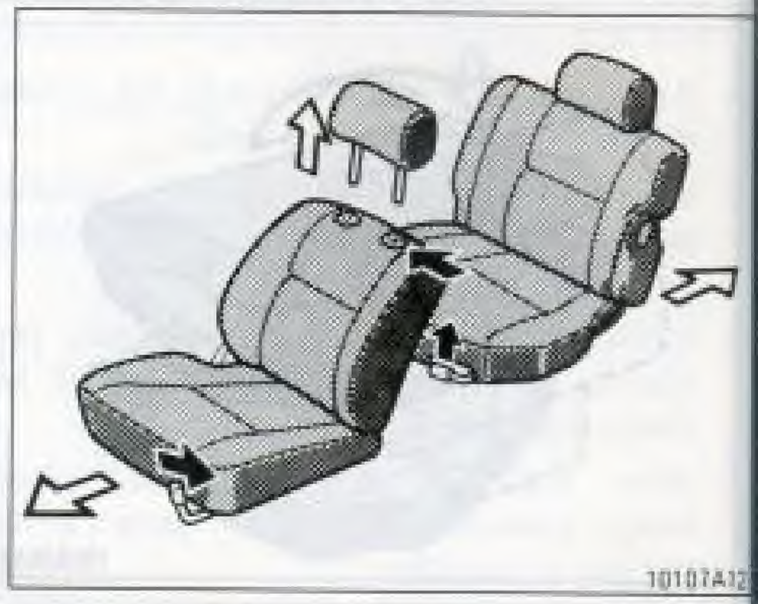

1. Slide the front seat to the front-most position and remove the headrest. Slide the second seat to the rear-most position.

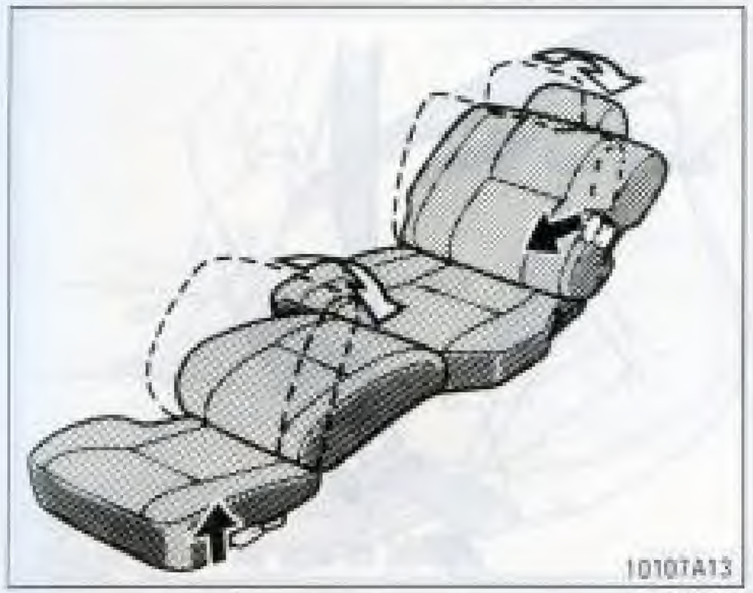

2. **Unlock the seatbacks and push them down.**

Headrests

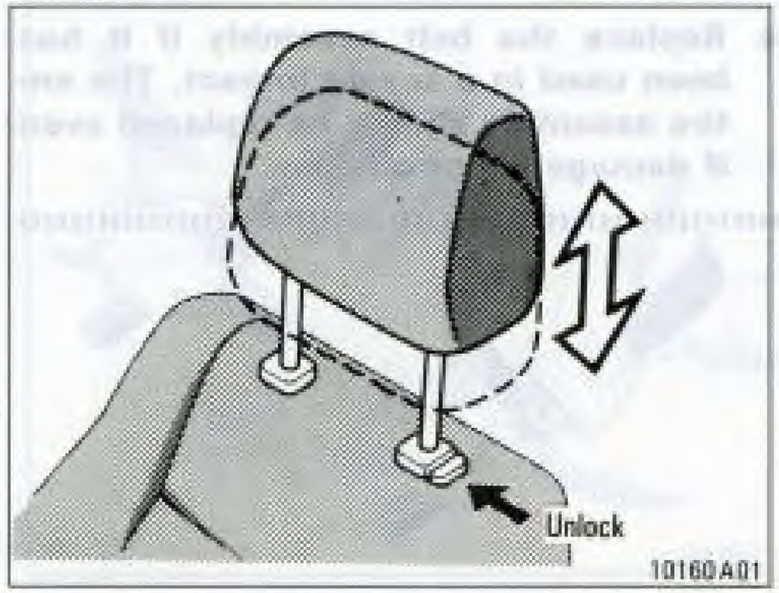

To raise the headrest, pull it up. To lower it, press the lock release button and push the headrest down.

The headrest is most effective when it is close to your head. Therefore, using a cushion on the seatback is not recommended.

CAUTION:

- **Adjust the top of the headrest so that it is closest to the top of your ears.**
- **After adjusting the headrest, make sure it is locked in position.**
- **Do not drive with the headrests removed.**

Seat belts—
—Seat belt precautions

Toyota recommends that the driver and passengers in the vehicle be properly restrained at all times with the seat belts provided. Failure to do so could increase the chance of injury and/or the severity of injury in accidents.

Child. On models with rear seat belts, we recommend that your child sit in the rear seat and be restrained with a seat belt. On models without rear seat belts, restrain the child with the front seat belt. Do not allow the child to stand up kneel on the seat.

Baby or small child. Child restraint systems are available. We recommend the use of a type which fits your vehicle. Before installation, always read the manufacturer's instructions.

Pregnant woman. Toyota recommends the use of a seat belt. Ask your doctor for specific recommendations. The lap belt should be worn securely and as low as possible over the hips and not on the waist.

Injured person. Toyota recommends the use of a seat belt. Depending on the injury, however, first check with your doctor.

If seat belt regulations exist in the country where you reside, please contact your Toyota dealer for seat belt replacement or installation.

CAUTION:

When using the seat belts, observe the following:

- **Use the belt for only one person at a time. Do not use a single belt for two or more people—even children.**
- **After inserting the tab, make sure that the connection is secure and the belt is not twisted.**
- **Avoid reclining the seatbacks too much. The seat belts provide maximum protection when the seatbacks are in the upright position. (See the seat adjustment instructions.)**
- **Be careful not to damage the belt webbing or hardware, and take care that they do not get caught or pinched in the seat or doors.**
- **Inspect the belt system periodically. Check for cuts, frays, and loose parts. Damaged parts should be replaced. Do not disassemble or modify the system.**
- **Keep the belts clean and dry. If they need cleaning, use a mild soap solution or lukewarm water. Never use bleach, dye, or abrasive cleaners —they may severely weaken the belts.**
- **Replace the belt assembly if it has been used in a severe impact. The entire assembly should be replaced even if damage is not obvious.**

—3-point type

Adjust the seat as needed and sit up straight and well back in the seat. To fasten your belt, pull it out of the retractor and insert the tab into the buckle.

You will hear a click when the tab locks into the buckle.

The seat belt length automatically adjusts to your size and the seat position.

The retractor will lock the belt during a sudden stop or on impact. It also may lock if you lean forward too quickly. A slow, easy motion will allow the belt to extend, and you can move around freely.

If the seat belt can not be pulled out of the retractor, firmly pull the belt and release it. You will then be able to smoothly pull the belt out of the retractor.

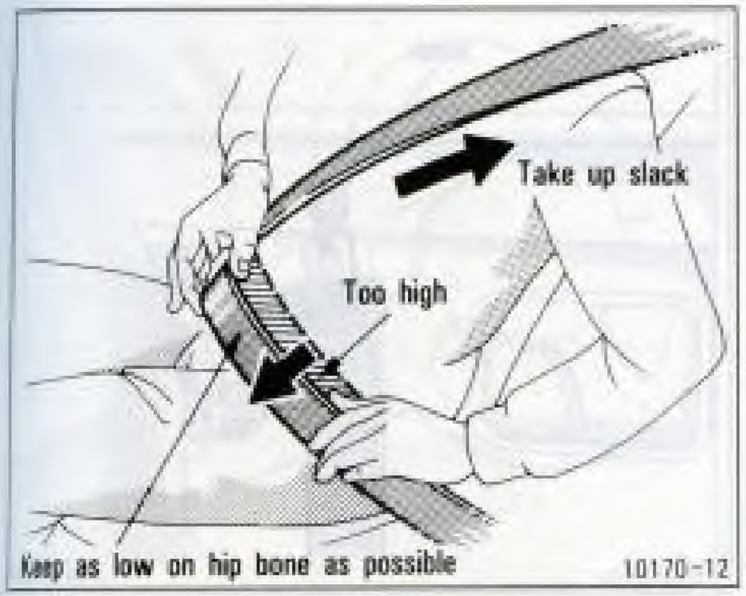

Adjust the position of the lap and shoulder belts.

Position the lap belt as low as possible on your hips—not on your waist, then adjust it to a snug fit by pulling the shoulder portion upward through the latch plate.

CAUTION:

- **High-positioned lap belts and loose-fitting shoulder belts both could increase the chance of injury due to sliding under the lap belt during an accident.**
- **For your safety, do not place the shoulder belt under your arm.**

To release the belt, press the buckle-release button and allow the belt to retract.

If the belt does not retract smoothly, pull it out and check for kinks or twists. Then make sure that it remains untwisted as it retracts.

—2-point type

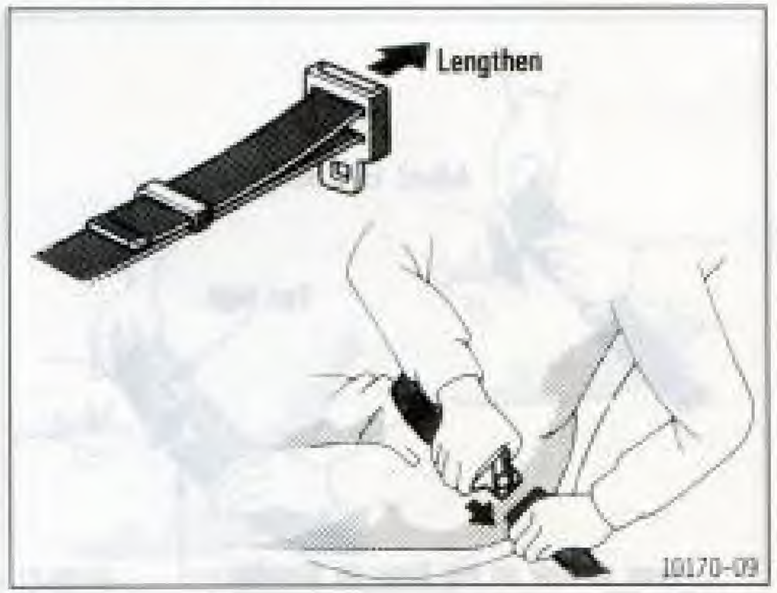

Adjust the seat as needed and sit up straight and well back in the seat. To fasten your belt, insert the tab into the buckle.

You will hear a click when the tab locks into the buckle.

If the belt is not long enough for you, hold the tab at a right angle to the belt and pull on the tab.

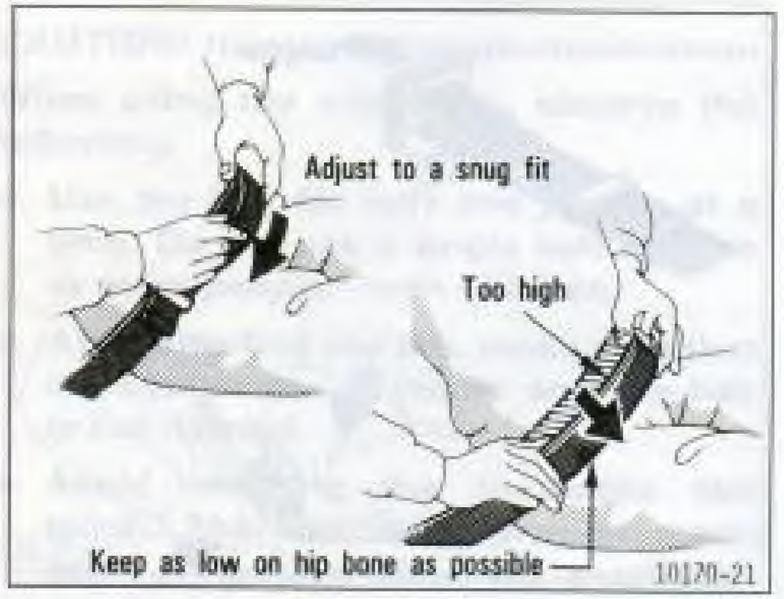

Remove excess length of the belt and adjust the belt position.

To shorten the belt, pull the free end of the belt.

Position the lap belt as low as possible on your hips—not on your waist, then adjust it to a snug fit.

CAUTION:

High-positioned lap belts could increase the chance of injury due to sliding under the lap belt during an accident.

To release the belt, press the buckle-release button.

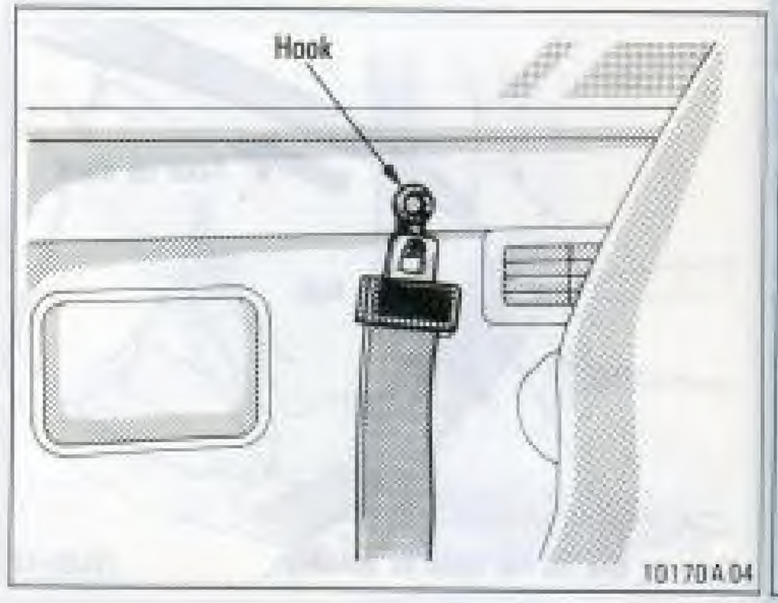

When a rear seat belt is not in use, hang the latch plate tab on the hook.

Tilt steering wheel

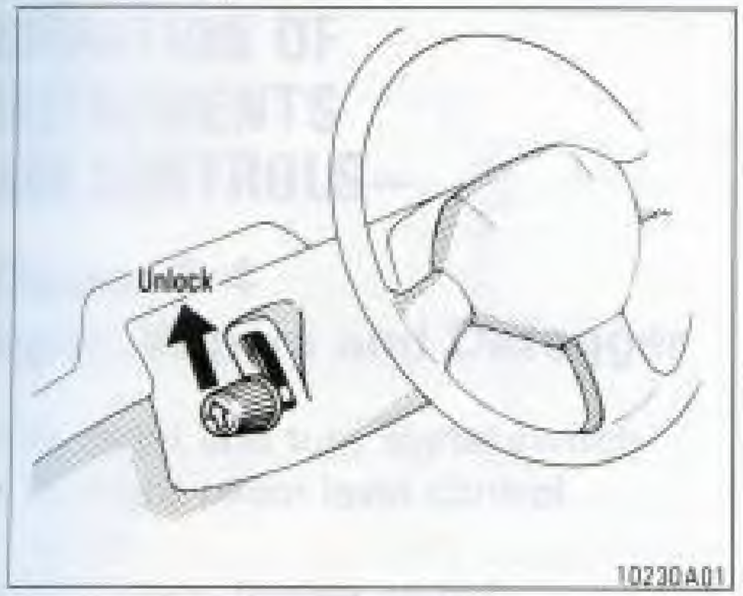

To change the steering wheel angle, push up the lock release lever, tilt the steering wheel to the desired angle and release the lever.

CAUTION:

- **This adjustment should not be made while the vehicle is moving.**
- **After adjusting the steering wheel, try moving it up and down to make sure it is locked in position.**

Anti-glare inside rear view mirror

Pull the lever toward you to reduce glare from the headlights of the vehicle behind you during night driving.

Before adjusting the mirror to the position with most clarity, push the day-night change lever away from you (daylight driving position).

Remember that by reducing glare you also lose some rear view clarity.

Part 1
OPERATION OF INSTRUMENTS AND CONTROLS–

Chapter 1-4
Lights, Wipers and Defogger

- Headlight and turn signal switch
- Headlight beam level control switch
- Emergency flasher switch
- Rear fog light switch
- Interior light
- Personal lights
- Luggage compartment light
- Windshield wiper and washer switch
- Rear window wiper and washer switch
- Headlight cleaner switch
- Rear window defogger switch

Headlight and turn signal switch

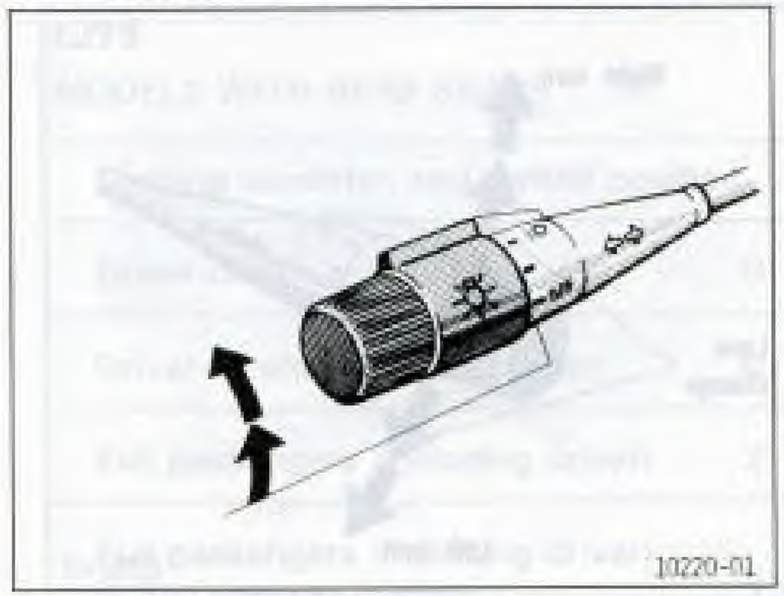

To turn the lights on, twist the knob on the end of the lever.

However, on some models, all the lights below also turn on when the engine is started with the headlight switch off.

FIRST CLICKSTOP: Only the parking, tail, license plate and instrument panel lights turn on.

SECOND CLICKSTOP: The headlights also turn on.

On vehicles sold in the United Kingdom and Germany, adjust the headlight beam level before turning on the headlights. (See "Headlight beam level control switch".)

On some models, the buzzer will remind you to turn the lights off when the driver's door is opened if the ignition switch is turned to the "LOCK" position with the headlight switch on.

NOTICE:

To prevent the battery from being discharged, do not leave the lights on for a long period while the engine is not running.

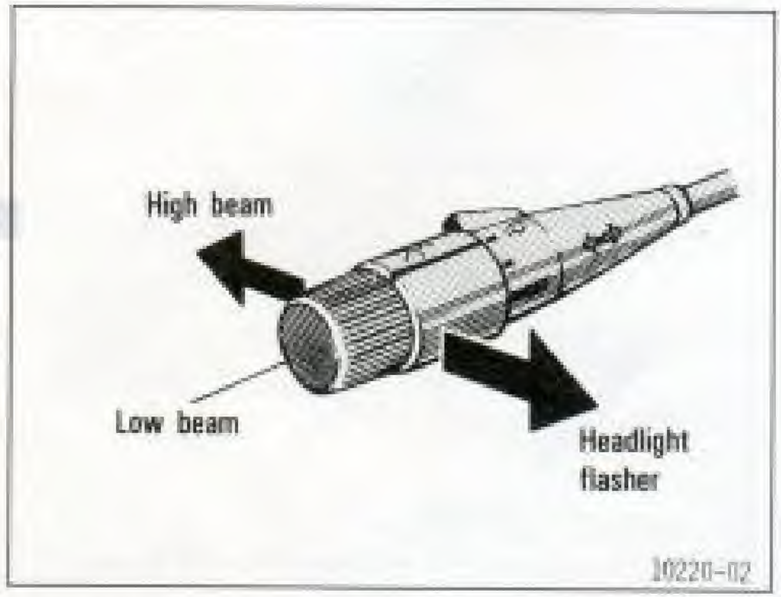

For high beam, push the lever away from you. Pull it toward you for low beam. For the headlight flasher, pull the lever all the way back and release.
On some models, the headlight switch must be at the second clickstop for high beam.

A blue light on the dashboard indicates high beam is on.

The headlight flasher works even when the headlight switch is off.

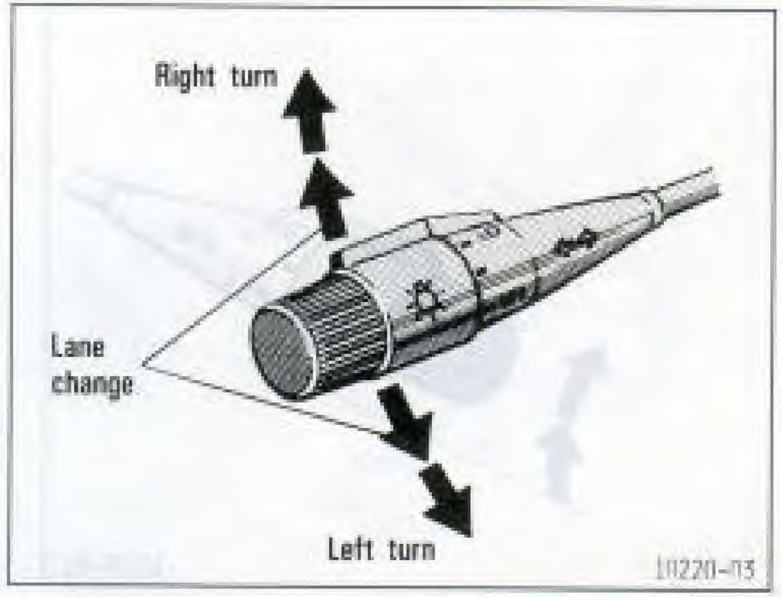

For signaling turns, move the lever up or down in the conventional manner.

The key must be in the "ON" position.

The turn signal is self-cancelling after a turn, but after a lane change, you may have to cancel it by hand. You can also signal a lane change by moving the turn signal lever partway and holding it there (left-hand drive vehicles only). If the green dashboard light flashes faster than normal, it indicates that the front or rear turn signal bulb has burned out.

Headlight beam level control switch (vehicles sold in the United Kingdom and Germany)

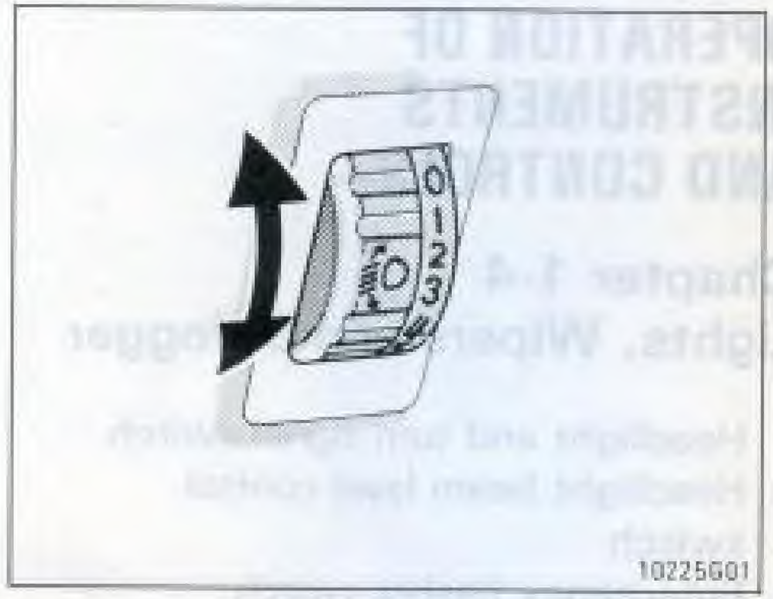

To adjust the headlight beam level, turn the switch.

Listed below are examples of proper switch settings. For loading conditions other than those listed, adjust the switch position so that the beam level is the same as the one obtained according to the list when only the driver is in the vehicle. The higher the number of the switch position, the lower the headlight beam level.

Always keep the headlight beam at the proper level, or your headlights may dazzle other road users.

LJ70 and RJ70

MODELS WITH REAR SEATS

Loading condition and switch position	
Driver only	0
Driver + one front passenger	0
Full passengers (including driver)	3
Full passengers (including driver) + full luggage loading	4
Driver + full luggage loading	4

MODELS WITHOUT REAR SEATS

Loading condition and switch position	
No luggage loading (driver only)	0
Driver + full luggage loading	5

LJ73

MODELS WITH REAR SEATS

Loading condition and switch position	
Driver only	0
Driver + one front passenger	0
Full passengers (including driver)	2
Full passengers (including driver) + full luggage loading	2
Driver + full luggage loading	3

MODELS WITHOUT REAR SEATS

Loading condition and switch position	
No luggage loading (driver only)	0
Driver + full luggage loading	4

Emergency flasher switch (type A)

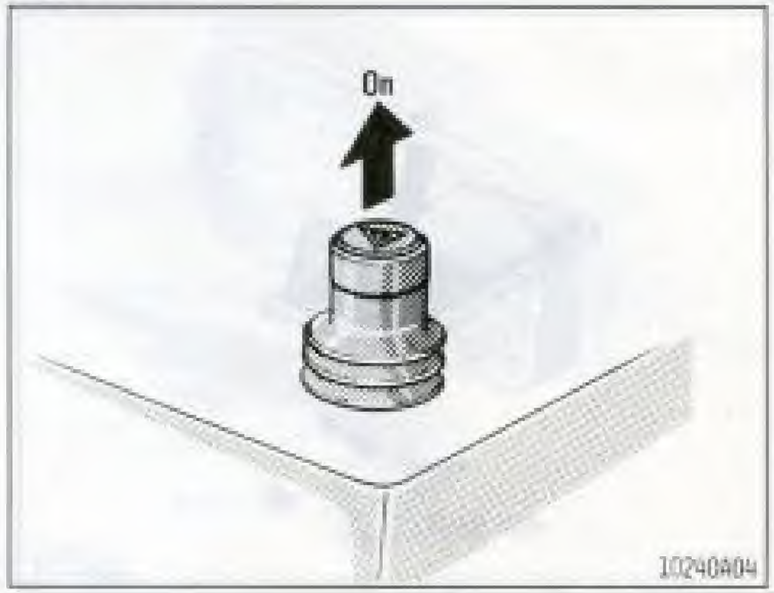

To turn on the emergency flashers, pull the switch out.

All the turn signal lights will flash.

Turn on the emergency flashers to warn other drivers if your vehicle must be stopped where it might be a traffic hazard.

Always pull as far off the road as possible.

The turn signal light switch will not work when the emergency flashers are in operating.

NOTICE:

To prevent the battery from being discharged, do not leave the switch on longer than necessary while the engine is not running.

Emergency flasher switch (type B)

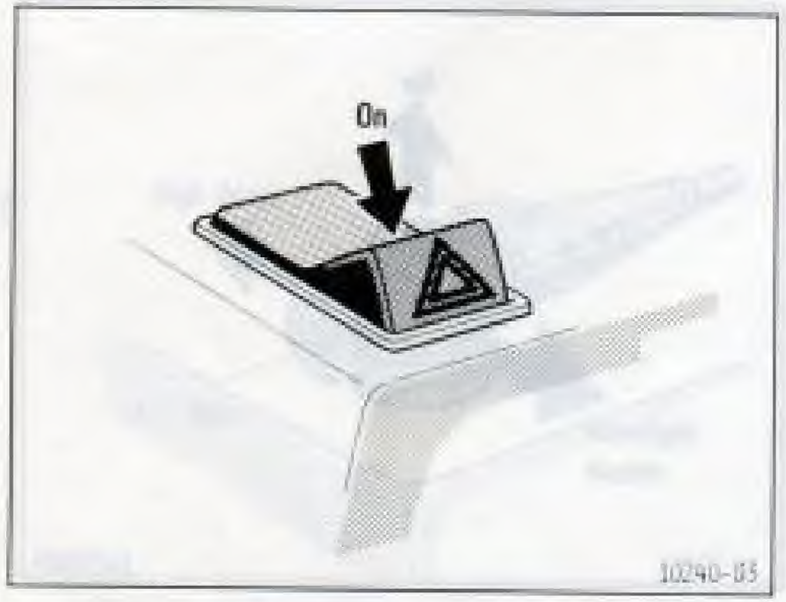

To turn on the emergency flashers, push the switch.

All the turn signal lights will flash.

Turn on the emergency flashers to warn other drivers if your vehicle must be stopped where it might be a traffic hazard.

Always pull as far off the road as possible.

The turn signal light switch will not work when the emergency flashers are operating.

NOTICE:

To prevent the battery from being discharged, do not leave the switch on longer than necessary while the engine is not running.

Rear fog light switch

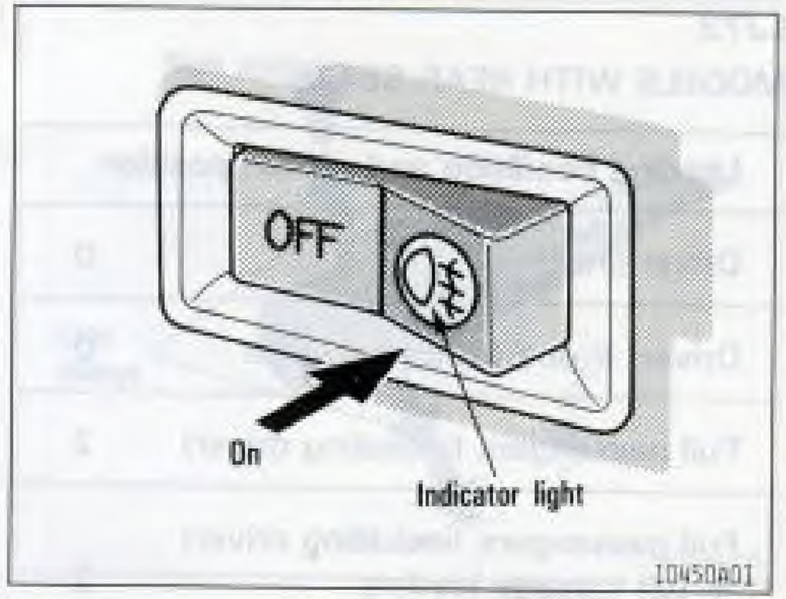

To turn on the rear fog light, push the switch. It will come on when the headlights are turned on.

Interior light (except pick-up)

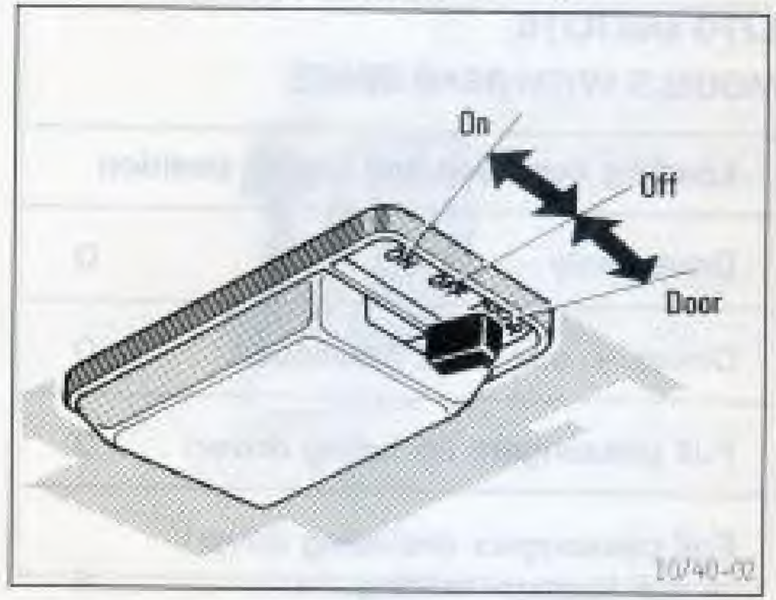

To turn on the interior light, slide the switch.

With the switch in the DOOR position, the light comes on when any of the side doors are opened. On some models, opening the back door also turns on the light.

Interior light (pick-up)

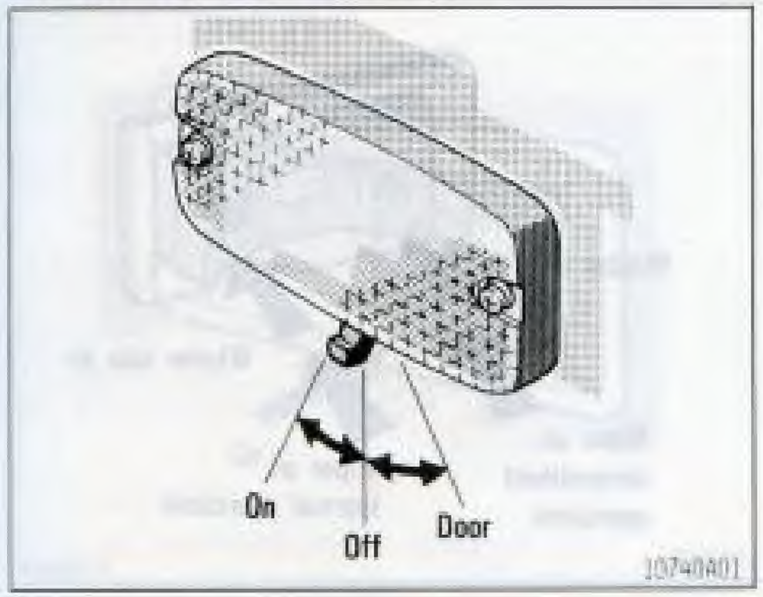

To turn on the interior light, slide the switch.

With the switch in the DOOR position, the light comes on when either of the side doors are opened.

Personal lights

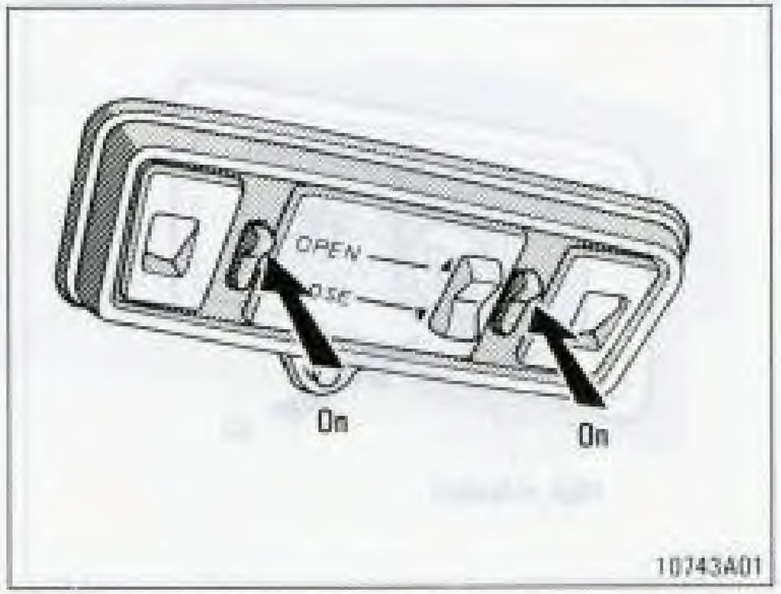

To turn on the personal light, push the switch.

Luggage compartment light

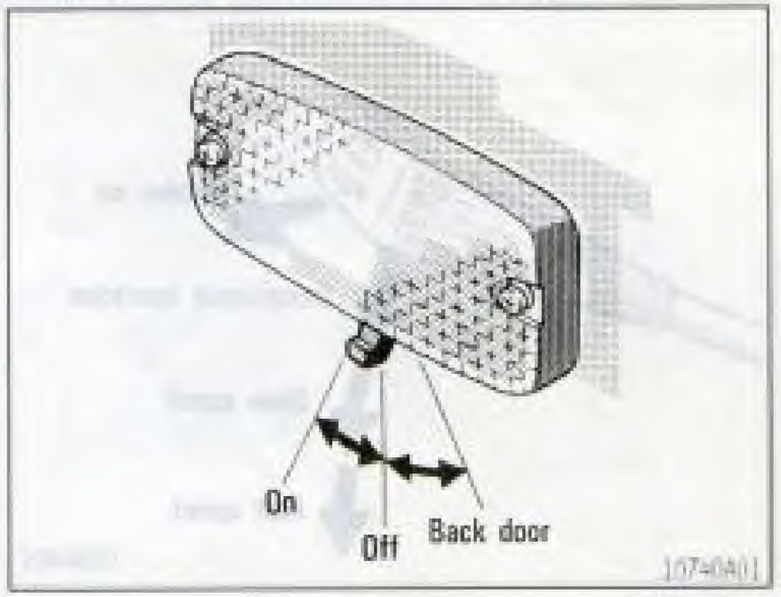

To turn on the luggage compartment light, slide the switch.

With the switch in the BACK DOOR position, the light comes on when the back door is opened.

Windshield wiper and washer switch

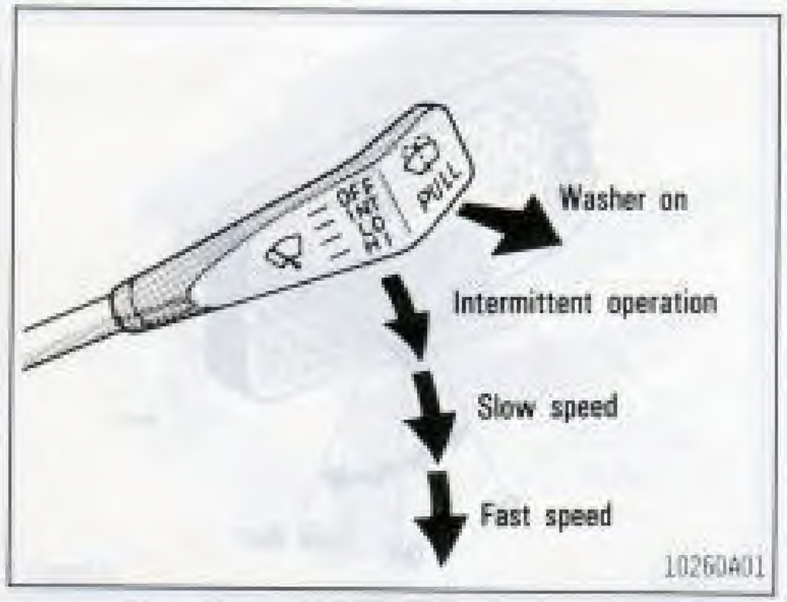

To turn the wipers on, move the lever. To make the washer squirt, pull the lever toward you.

The key must be in the "ON" position.

The wipers will operate at intervals when the lever is in the "INT" position.

The wipers will automatically operate a couple of times after the washer squirts even with the lever in the "OFF" position.

If the washer does not work, check to see whether the washer tank is empty. For information on adding washer fluid, see "Adding washer fluid" in Chapter 7-3.

In cold weather, warm the windshield with the defroster before using the washer. This will help prevent icing, which could block your vision.

NOTICE:

Do not operate the wipers if the windshield is dry. It may scratch the glass.

Rear window wiper and washer switch

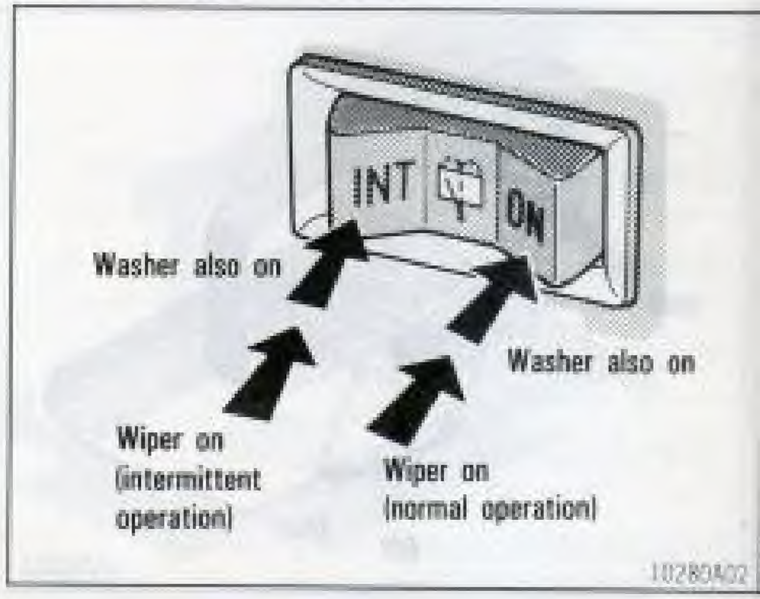

To turn the rear wiper and washer on, push the switch.

The key must be in the "ON" position.

The rear wiper will operate at intervals when the switch is pushed on the "INT" side.

If the washer does not work, check to see whether the washer tank is empty. For information on adding washer fluid, see "Adding washer fluid" in Chapter 7-3.

NOTICE:

Do not operate the rear wiper if the rear window is dry. It may scratch the glass.

Headlight cleaner switch

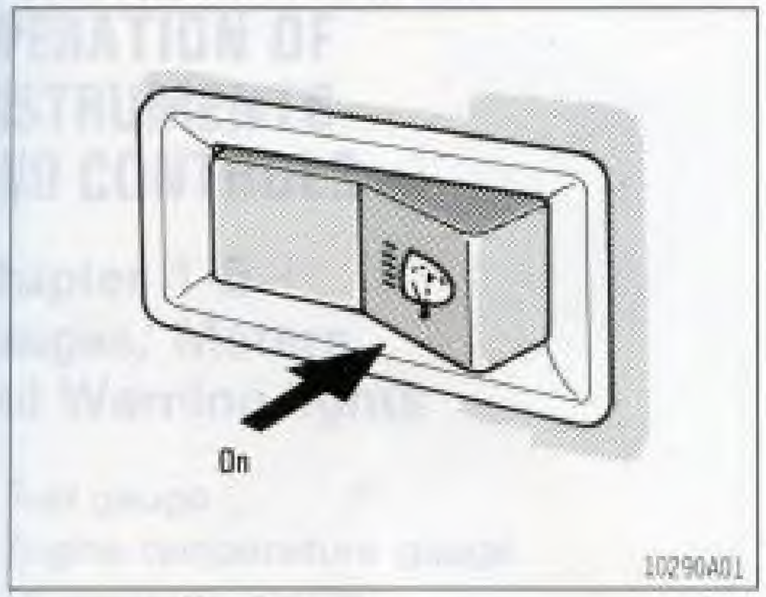

To spray fluid on the headlights, turn the headlights on and push the switch.

The key must be in the "ON" position.

Check the fluid level of the see-through headlight cleaner tank every so often.

Use washer fluid for replenishment. For information on adding fluid, see "Adding washer fluid" in Chapter 7-3.

NOTICE:

Do not turn the headlight cleaner on with the tank empty. It may cause the cleaner motor to overheat.

Rear window defogger switch

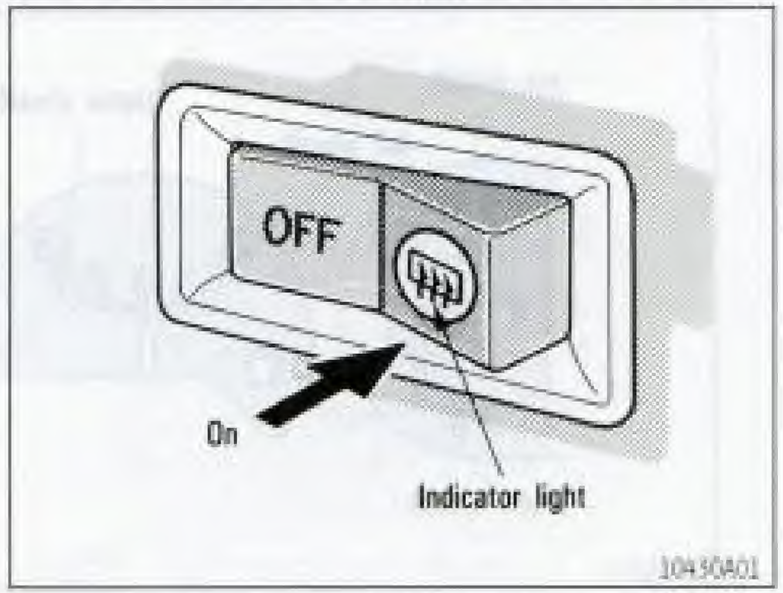

To defog or defrost the rear window, push the switch.

The key must be in the "ON" position.

The thin heater wires on the inside of the rear window will quickly clear the window surface. An indicator light will illuminate to indicate the defogger is operating.

When the surface has cleared, turn the defogger off. Continuous use may cause the battery to discharge, especially during stop-and-go driving. The defogger is not designed for drying rain water or for melting snow.

NOTICE:

To prevent the battery from being discharged, turn the switch on when the engine is running.

When cleaning the inside of the rear window, be careful not to scratch or damage the heater wires.

Part 1
OPERATION OF INSTRUMENTS AND CONTROLS–

Chapter 1-5
Gauges, Meters and Warning lights

- Fuel gauge
- Engine temperature gauge
- Oil pressure gauge
- Voltmeter
- Tachometer
- Odometer and trip meter
- Clinometers
- Altimeter
- Thermometer
- Warning lights and buzzers
- Turbo operation indicator light

Fuel gauge

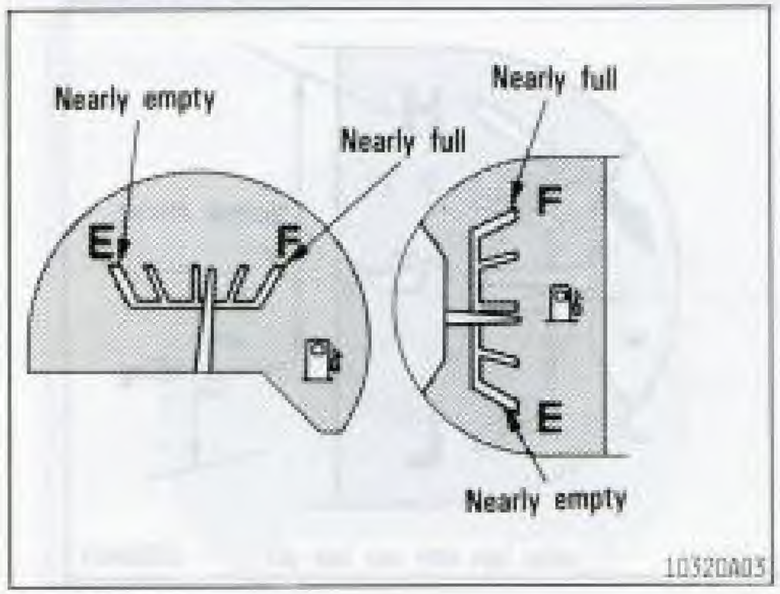

The gauge works when the ignition switch is on and indicates approximate quantity of fuel remaining in the tank.

It is a good idea to keep the tank over 1/4 full.

The needle moves when braking, accelerating or making turns. This is caused by the movement of the fuel in the tank.

Do not drive with the fuel level below the "E". It may cause engine misfire, and damage to the catalytic converter.

Engine temperature gauge

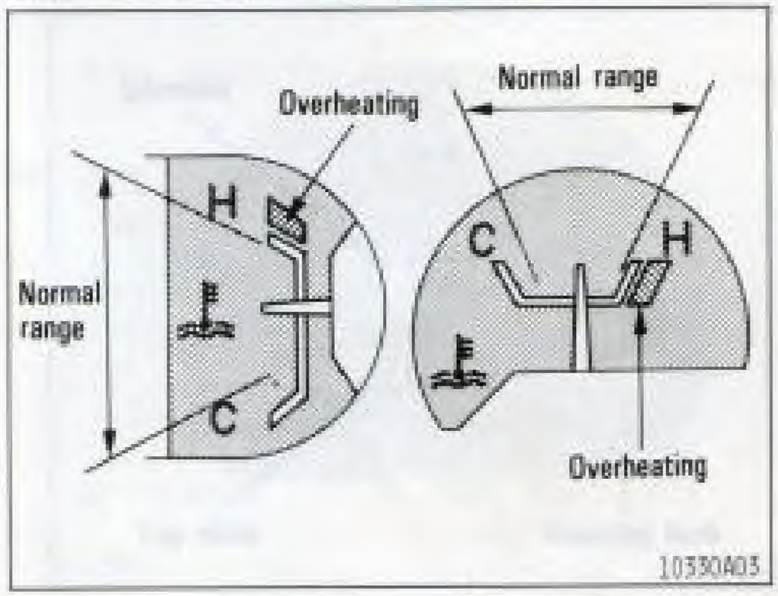

The gauge indicates the engine coolant temperature when the ignition switch is on. The engine operating temperature will vary with changes in weather and engine load.

If the needle points to the red zone or higher, stop your vehicle and allow the engine to cool.

Your vehicle may overheat during severe operating conditions, such as:

- Driving up a long hill on a hot day.
- Reducing speed or stopping after high speed driving.
- Idling for a long period with the air conditioner on in stop-and-go traffic.
- Towing a trailer.

Oil pressure gauge

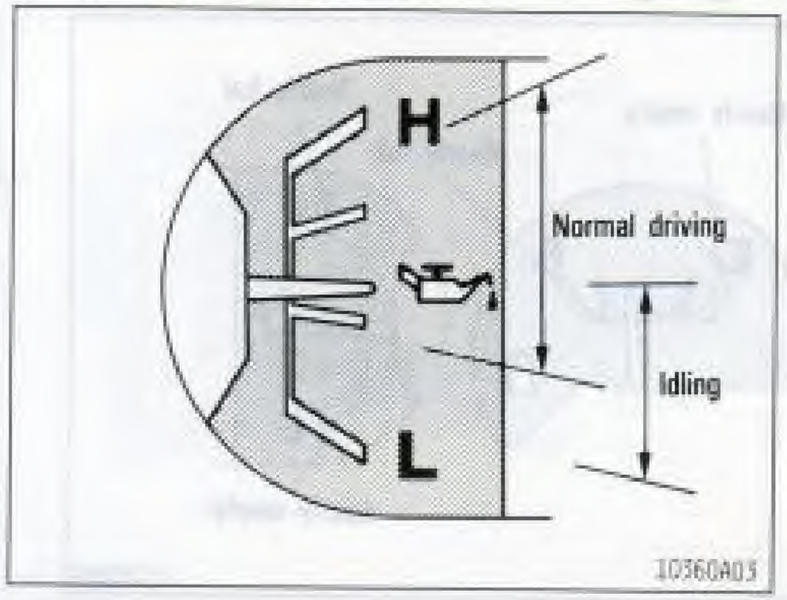

NOTICE:

Do not continue driving with an overheated engine. See "If your vehicle overheats" in Part 4.

The oil pressure gauge indicates engine oil pressure when the ignition is on. Check it while driving to make sure that the needle is in the proper range.

If the oil pressure should stay below the normal range, pull off the road to a safe place and stop the engine immediately. Call a Toyota dealer or qualified repair shop for assistance.

Oil pressure may not build up when the oil level is too low. The oil pressure gauge is not designed to indicate oil level, and the oil level must be checked using the level dipstick.

NOTICE:

Do not drive the vehicle with the oil pressure below the normal range until the cause is fixed—it may ruin the engine.

Voltmeter

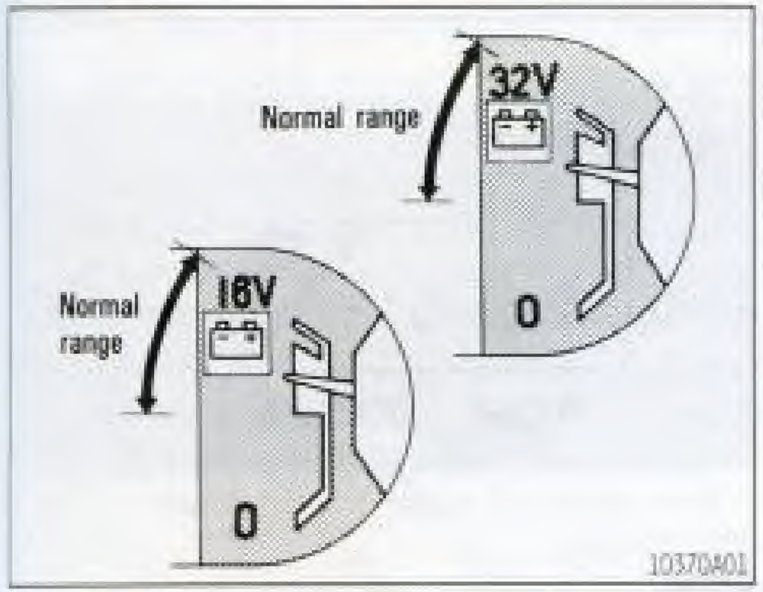

The voltmeter tells whether the battery is charged or discharged. Check it while the engine is running—the needle should always indicate as shown above.

If the needle reads below or above the normal range while the engine is running, it indicates the charging system needs immediate repair.

However, it is normal for the needle to drop below the normal range during engine starting.

Tachometer

The tachometer indicates engine speed in thousands of rpm (revolutions per minute). Use it while driving to select correct shift points and to prevent engine lugging and overrevving.

Driving with the engine running too fast causes excessive engine wear and poor fuel economy. Remember, in most cases the slower the engine speed, the greater the fuel economy.

NOTICE:

Do not run the needle into the red zone. This may cause severe engine damage.

Odometer and trip meter

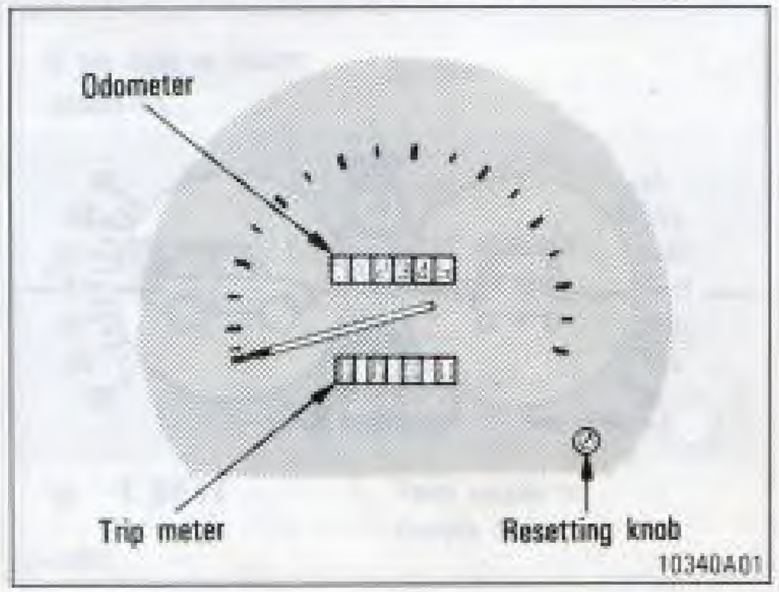

The odometer records the total distance the vehicle has been driven. The trip meter may be set to zero to record the distance on each trip. To set the trip meter, press the knob in and release it.

The black digits in white indicate tenths of kilometers or miles.

Clinometers

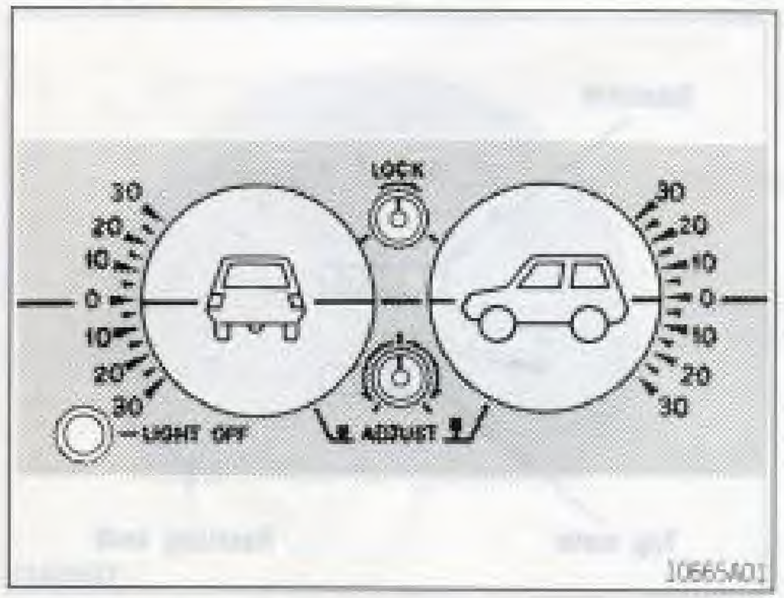

The clinometers show the horizontal and longitudinal inclination of the vehicle.

To adjust the horizontal clinometer, turn the "ADJUST" knob. To adjust the longitudinal clinometer, pull and turn the "ADJUST" knob. To lock both meters in the level position, turn the "LOCK" knob clockwise.

The illumination lights will come on when the instrument panel lights are turned on. To turn them off, push the "LIGHT OFF" button in.

The clinometers show the correct angle of inclination only when the vehicle is completely stopped.

Altimeter

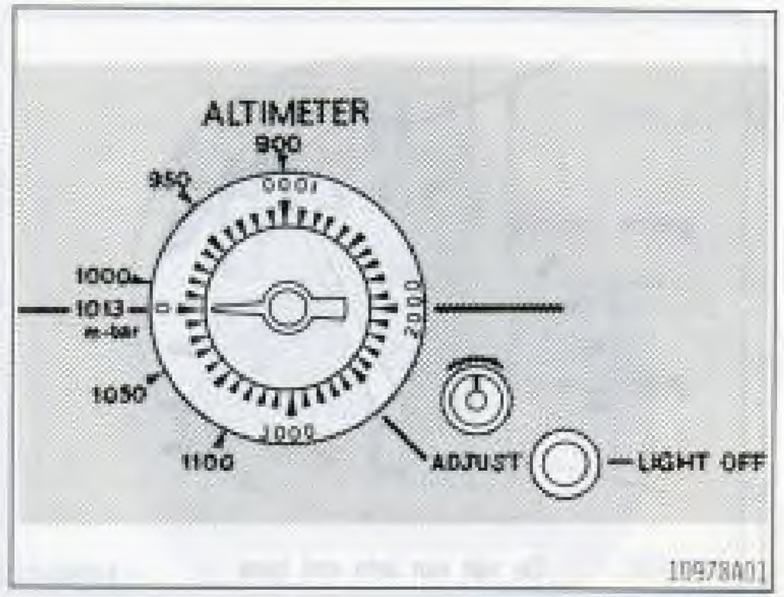

The altimeter shows the difference in altitude between your starting point and destination. Before starting, align the "O" scale with the needle by turning the "ADJUST" knob.

If you know the current altitude, align its scale with the needle, and then you will be able to know the altitude when you arrive at your destination.

The illumination lights will come on when the instrument panel lights are turned on. To turn them off, push the "LIGHT OFF" button in.

Small errors in indication are unavoidable due to change in weather, during high-speed driving, in undersea tunnels, etc.

CAUTION:

For safety, do not set while driving.

Thermometer

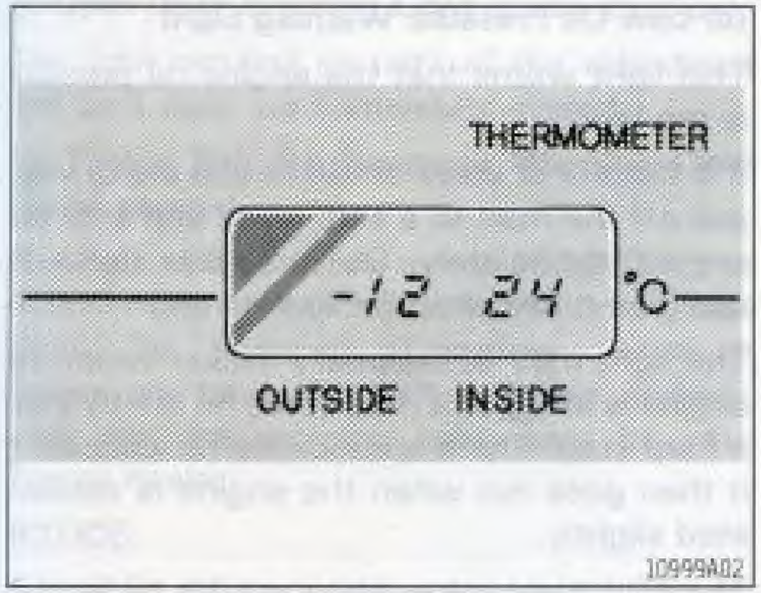

The thermometer indicates the inside ("INSIDE") and outside ("OUTSIDE") air temperatures with the ignition key at the "ACC" or "ON" position.

When the tail lights are turned on, the brightness of the display will be reduced.

Warning lights and buzzers

If the light or buzzer comes on...	Do this.
(a) (P)	Release parking brake.
(b) (!)	Stop and check.
(c)	Stop and check.
(d)	Stop and check.
(e) CHECK	Take vehicle to Toyota dealer.

If the light or buzzer comes on...	Do this.
(f)	Close all doors and back door.
(g) T.BELT	Take vehicle to Toyota dealer.
(h) FILTER (Light and buzzer)	Drain water.
(i) TURBO (amber color)	Take vehicle to Toyota dealer.
(j) Light reminder buzzer	Turn off lights.

(a) Parking Brake Reminder Light

If this light is on, make sure the parking brake is fully released. The light should go off.

(b) Brake System Warning Light

This light has the following functions:

Low brake fluid level warning (all models)
and
Low vacuum warning
(diesel-powered vehicles)

If this light comes on and stays on while you are driving, slow down and pull off the road. Then stop the vehicle carefully. There may be a problem somewhere in the brake system. Check the fluid level of the see-through reservoir.

If the brake fluid level is low...

At a safe place, test your brakes by starting and stopping.

- If you judge that the brakes still work adequately, drive cautiously to your nearest dealer or shop for repairs.
- If the brakes are not working, have the vehicle towed in for repairs. (For towing information, see Part 4.)

CAUTION:

Continued normal driving with low brake fluid level is dangerous.

If the brake fluid level is correct...

Gasoline-powered vehicles

Have the warning system checked by your Toyota dealer.

Diesel-powered vehicles
(low vacuum warning)

Test your brake booster by following the instructions given in Chapter 7-2.

- If you judge that the brake booster still works adequately, have the warning system checked by your Toyota dealer.
- If the brake booster is not working, have the vehicle towed in for repairs. (For towing information, see Part 4.)

CAUTION:

Continued driving with an inoperative brake booster is dangerous.

(c) Discharge Warning Light

This light warns that the battery is being discharged.

If it comes on while you are driving, there is a problem somewhere in the charging system.

The engine ignition will continue to operate, however, until the battery is discharged. Turn off the air conditioner, blower, radio, etc., and drive directly to the nearest Toyota dealer or repair shop.

(d) Low Oil Pressure Warning Light

This light warns that the engine oil pressure is too low.

If it flickers or stays on while you are driving, pull off the road to a safe place and stop the engine immediately. Call a Toyota dealer or qualified repair shop for assistance.

The light may occasionally flicker when the engine is idling or it may come on briefly after a hard stop. There is no cause for concern if it then goes out when the engine is accelerated slightly.

The light may come on when the oil level is extremely low. It is not designed to indicate low oil level, and the oil level must be checked using the level dipstick.

NOTICE:

Do not drive the vehicle with the warning light on—even for one block—until the cause is fixed. It may ruin the engine.

(e) Engine System Warning Light
(22R-E engine)

This light warns that there is a problem somewhere in your engine electrical system.

If it comes on while you are driving, have your vehicle checked/repaired by your Toyota dealer as soon as possible.

(f) Open Door Warning Light (some models)

This light remains on until all the side doors and back door are completely closed.

(g) Timing Belt Replacement Warning Light (diesel engine)

This light will come on every 100000 km or 60000 miles to indicate that the timing belt should be replaced. Therefore, when it comes on, have the belt replaced immediately and the warning light reset by your Toyota dealer.

NOTICE:

Continued driving without having the belt replaced will result in a broken belt and engine damage.

(h) Fuel Filter Warning Light (diesel engine)

The light warns you that the amount of accumulated water in the fuel filter has reached the specified level.

If it comes on, drain the water immediately. (See Chapter 7-2 for instructions for how to drain the water.)

NOTICE:

Never drive the vehicle with the warning light on. Continued driving with water accumulated in the fuel filter will damage the fuel injection pump.

(i) Turbo Warning Light (2L-T engine)

This light warns that the boost pressure in the turbo system is abnormally high.

If it comes on while driving, slow down until the light goes out, and have your vehicle checked by your Toyota dealer as soon as possible.

NOTICE:

Never drive at high speed or race the engine even after the light goes out.

(j) Light Reminder Buzzer (some models)

This buzzer will sound when the driver's door is opened if the ignition switch is turned to the "LOCK" position with the headlight switch on. Removing the key will not stop the buzzer as long as the headlight switch is on.

CHECKING WARNING LIGHTS

1. Apply the parking brake.
2. Open one of the side doors.
The open door warning light should come on.
3. Close the side door.
The open door warning light should go off.
4. Place the transfer in "N" position.
5. Turn the ignition key to "ON", but do not start the engine.
All the warning lights except the open door warning light should come on.

If any warning light or buzzer does not function, either the bulb is burned out or the circuit is in need of repair. Have it checked by your Toyota dealer as soon as possible.

Turbo operation indicator light (2L-T engine)

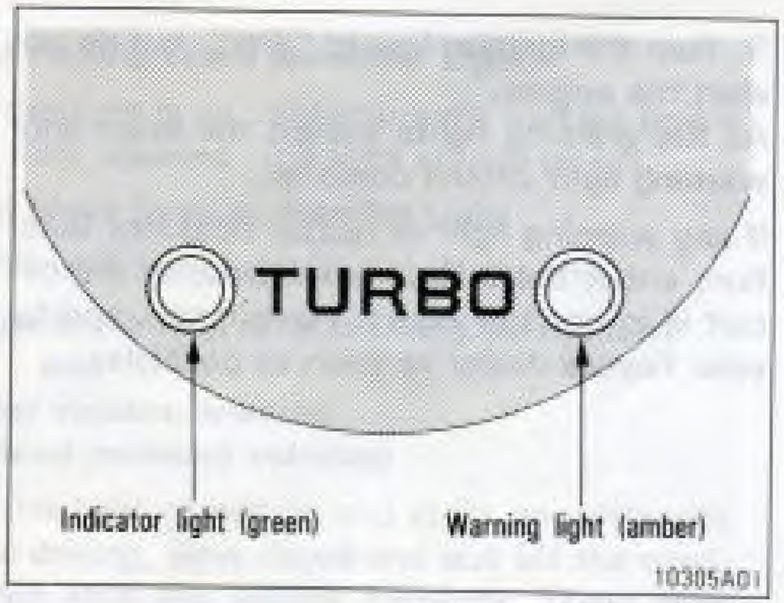

The turbo operation indicator light (green color) shows that the turbo system is operating normally.

To check the indicator light, turn the ignition key to the "ON" position, but do not start the engine.

Part 1
OPERATION OF INSTRUMENTS AND CONTROLS–

Chapter 1-6
Ignition switch, Transmission and Parking brake

- Ignition switch with steering lock
- Throttle knob
- Manual transmission
- Four-wheel drive system
- Front and rear differential lock system
- Rear differential lock system
- Parking brake

Ignition switch with steering lock (gasoline engine)

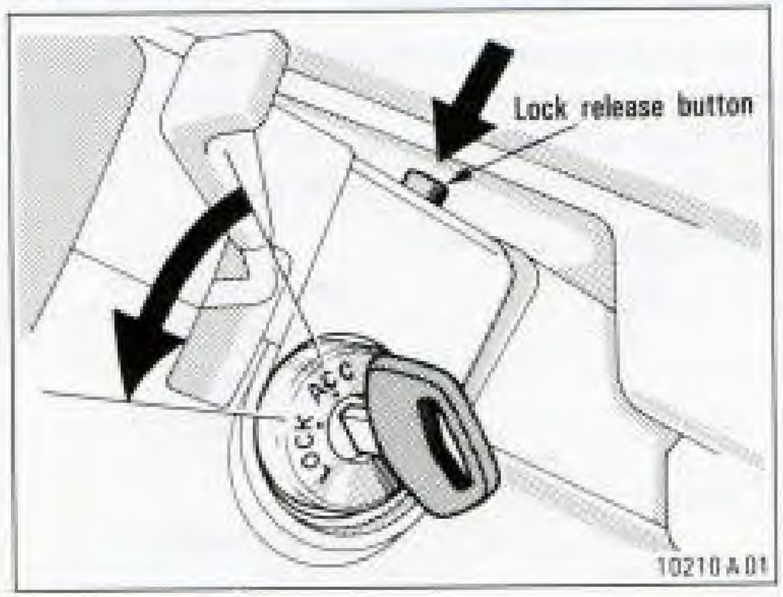

"START"—Starter motor on. The key will return to the "ON" position when released.

For starting tips, see Part 3.

"ON"—Engine on and all accessories on.

This is the normal driving position.

"ACC"—Accessories such as the radio operate, but the engine is off.

"LOCK"—Engine is off and the steering wheel is locked. The key can be removed only at this position.

You must press in the lock release button to turn the key to the "LOCK" position.

When starting the engine, the key may seem stuck at the "LOCK" position. To free it, first be sure the key is pushed all the way in, and then rock the steering wheel slightly while turning the key gently.

CAUTION:

Never remove the key when the vehicle is moving, as this will lock the steering wheel and result in loss of steering control.

NOTICE:

Do not leave the key in the "ON" position if the engine is not running. The battery will discharge and the ignition could be damaged.

Ignition switch with steering lock (diesel engine)

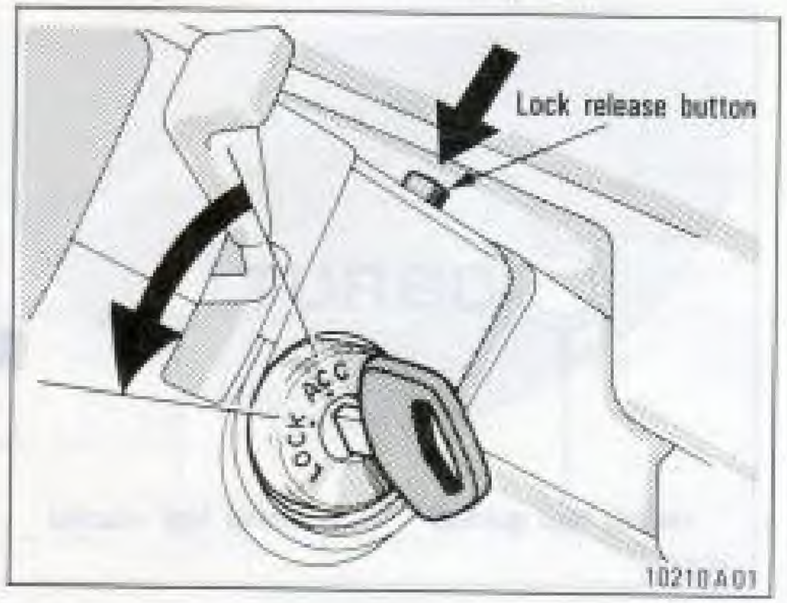

"START" —Starter motor on. The key will return to the "ON" position when released.

For starting tips, see Part 3.

"ON"—Engine on and all accessories on. Before starting, glow plugs on and engine preheated.

This is the normal driving position.

"ACC"—Accessories such as the radio operate, but the engine is off.

"LOCK"—Engine is off and the steering wheel is locked. The key can be removed only at this position.

You must press in the lock release button to turn the key to the "LOCK" position.

When starting the engine, the key may seem stuck at the "LOCK" position. To free it, first be sure the key is pushed all the way in, and then rock the steering wheel slightly while turning the key gently.

CAUTION:

Never remove the key when the vehicle is moving, as this will lock the steering wheel and result in loss of steering control.

NOTICE:

Do not leave the key in the "ON" position if the engine is not running. The battery will discharge.

Throttle knob (for owners in Germany)

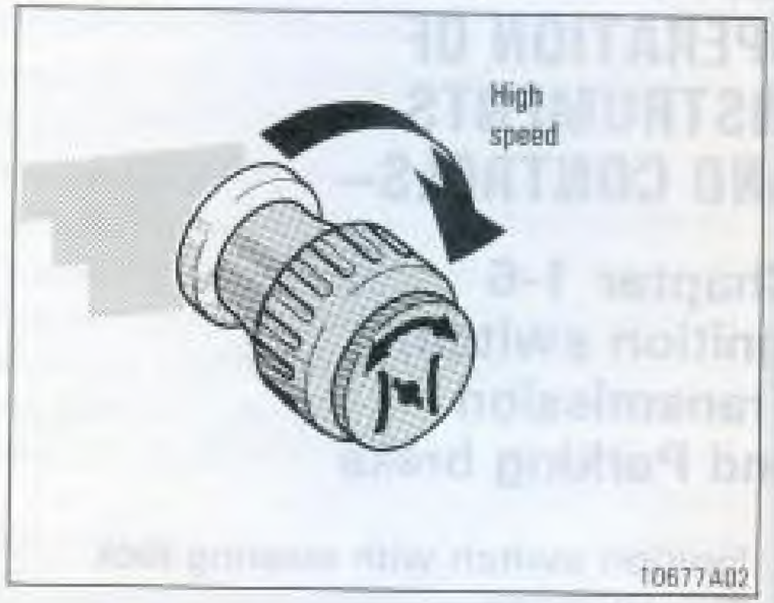

Turn the throttle knob clockwise to increase engine speed. To return the engine to the normal idle speed, turn the knob counterclockwise.

Vehicles with 1PZ or 1HZ engine: Use the throttle knob if the engine runs roughly in extremely cold conditions. (For detailed information, see "How to start the engine" in Part 3.)

Throttle knob (for owners outside Germany)

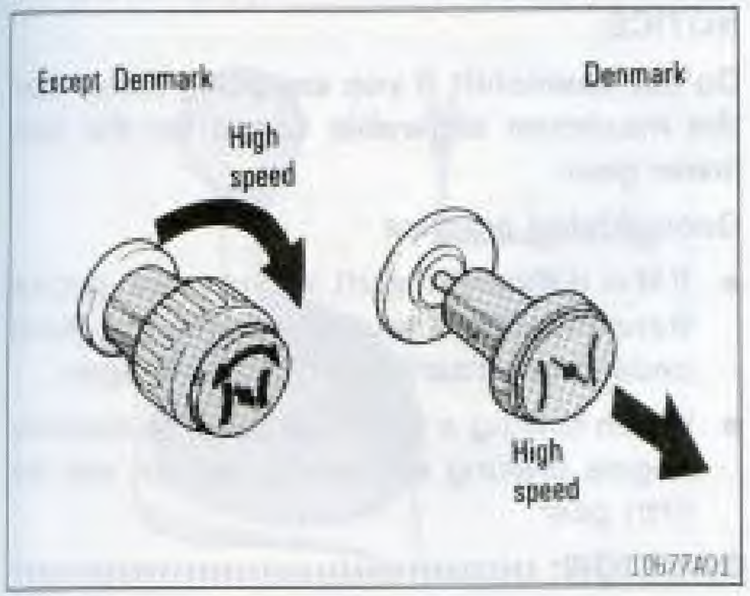

Vehicles sold outside Denmark: Turn the throttle knob clockwise to increase engine speed. To return the engine to the normal idle speed, turn the knob counterclockwise.

Vehicles sold in Denmark: Pull out the throttle knob to increase engine speed. To return the engine to the normal idle speed, push it in.

Use the throttle knob when using the winch.

Vehicles with 1PZ or 1HZ engine: Use the throttle knob if the engine runs roughly in extremely cold conditions. (For detailed information, see "How to start the engine" in Part 3.)

CAUTION:

Do not use the throttle knob when the vehicle is moving. This could result in longer stopping distance.

Manual transmission

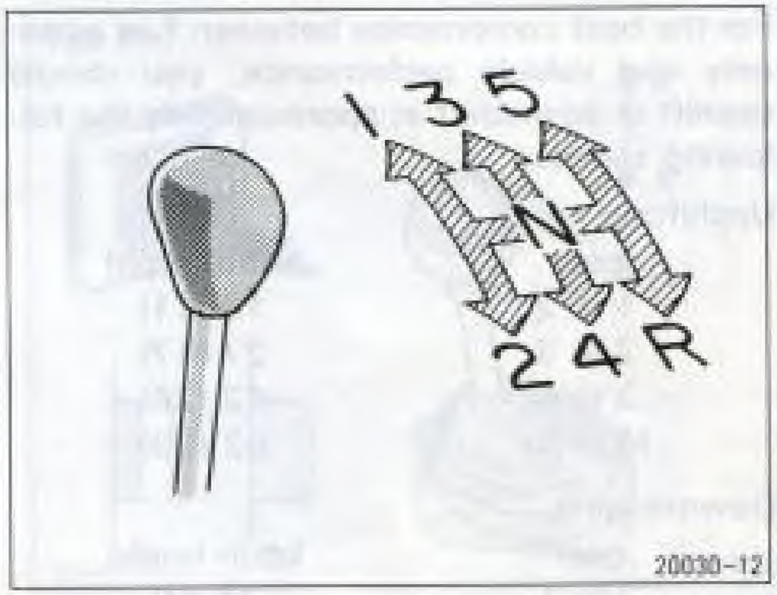

The shift pattern is conventional as shown above.

Press the clutch pedal down fully while shifting, and then release it slowly. Do not rest your foot on the pedal while driving, because it will cause a clutch trouble. And do not use the clutch to hold the vehicle when stopped on an uphill grade—use the parking brake.

Recommended shifting speeds

The transmission is fully synchronized and upshifting or downshifting is easy.

For the best compromise between fuel economy and vehicle performance, you should upshift or downshift at approximately the following speeds:

Upshifting

gear	km/h (mph)
1 to 2	18 (11)
2 to 3	27 (17)
3 to 4	42 (26)
(4 to 5)	62 (39)

Downshifting

gear	km/h (mph)
2 to 1	15 (9)
3 to 2	25 (16)
4 to 3	40 (25)
(5 to 4)	50 (31)

Upshifting too soon or downshifting too late will cause lugging and, possibly, pinging. Regularly revving the engine to maximum speed in each gear will cause excessive engine wear and high fuel consumption.

Maximum allowable speeds

To get on a highway or to pass slower traffic, maximum acceleration may be necessary. Make sure you observe the following maximum allowable speeds in each gear:

22R and 22R-E engine

gear	km/h (mph)
1	39 (25)
2	65 (40)
3	105 (65)

2L-T engine

gear	km/h (mph)
1	27 (17)
2	51 (32)
3	73 (45)

1PZ engine

gear	km/h (mph)
1	29 (18)
2	54 (34)
3	88 (55)

1HZ engine

gear	km/h (mph)
1	27 (17)
2	50 (31)
3	86 (53)

NOTICE:

Do not downshift if you are going faster than the maximum allowable speed for the next lower gear.

Good driving practice

- If it is difficult to shift into reverse, put the transmission in neutral, release the clutch pedal momentarily, and then try again.
- When towing a trailer, in order to maintain engine braking efficiency, do not use the fifth gear.

CAUTION:

Be careful when downshifting on a slippery surface. Abrupt shifting could cause the vehicle to spin or skid.

NOTICE:

Make sure the vehicle is completely stopped before shifting into reverse.

Four-wheel drive system—
(a) Front drive control (lever type)

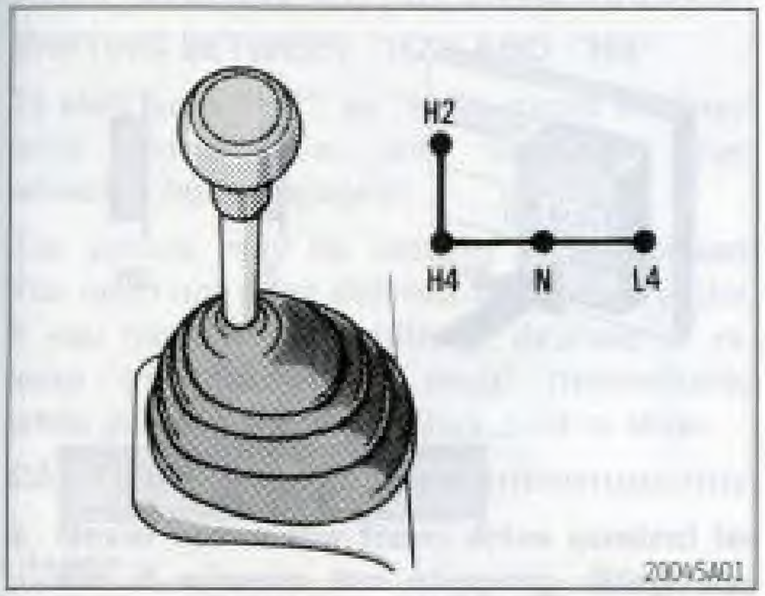

The front drive control lever selects one of the transfer modes below by the position.

The four-wheel drive indicator light shows when the front drive control lever is in the "H4", "N" or "L4" position.

"H2": High range, two-wheel drive
Use this for normal driving on dry hard-surfaced roads. This position gives greater economy, quietest ride and least wear.

"H4": High range, four-wheel drive
Use this for normal driving on wet, icy or snow-covered roads. This position provides greater traction than two-wheel drive.

"N": Neutral
No power is delivered to the wheels. Use this position only for operating a winch or other equipment. The vehicle must be stopped.

"L4": Low range, four-wheel drive
Use this for maximum power and traction. Use "L4" for climbing or descending steep hills, off-road driving, and hard pulling in sand, mud or deep snow.

See "(c) Shifting procedure" for further instructions.

(a) Front drive control (lever/button type)

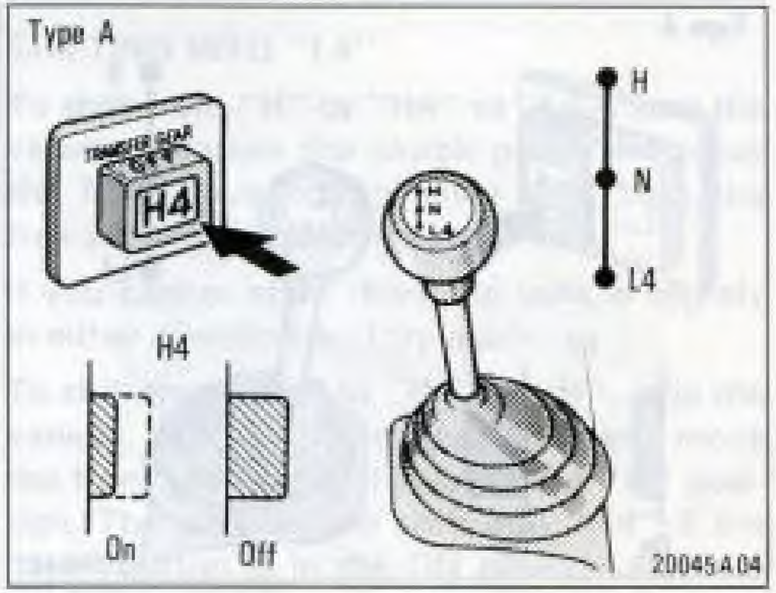

The front drive control lever and "H4" button select one of the transfer modes below by the positions.

The "H" position of the front drive control lever provides either "H" or "H4" transfer mode depending on the "H4" button position.

The four-wheel drive indicator light shows when the front drive control lever is in the "L4" position or when the "H4" button is pushed in.

"H": High range, two-wheel drive
Use this for normal driving on dry hard-surfaced roads. This position gives greater economy, quietest ride and least wear.

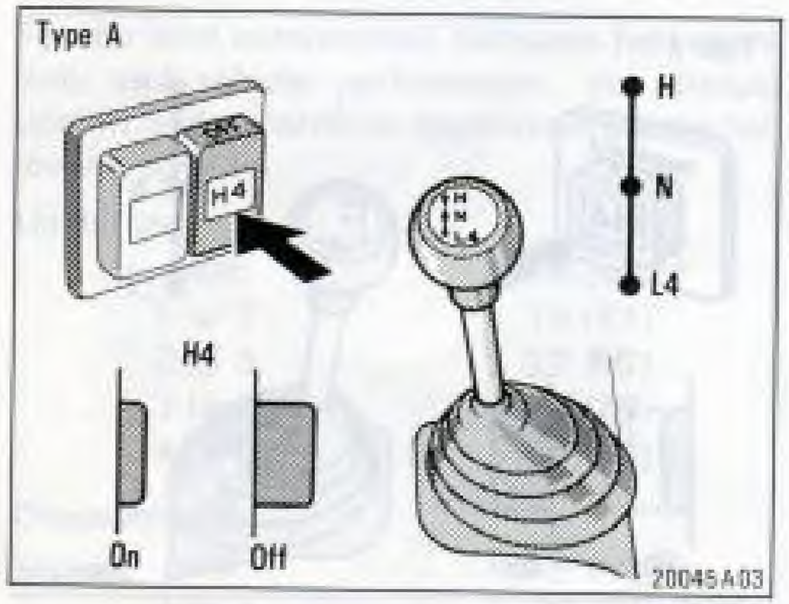

"H4": High range, four-wheel drive
Use this for normal driving on wet, icy or snow-covered roads. This position provides greater traction than two-wheel drive.

"N": Neutral
No power is delivered to the wheels. Use this position only for operating a winch or other equipment. The vehicle must be stopped.

"L4": Low range, four-wheel drive
Use this for maximum power and traction. Use "L4" for climbing or descending steep hills, off-road driving, and hard pulling in sand, mud or deep snow.

See "(c) Shifting procedure" for further instructions.

(b) Free-wheeling hubs (manual type)

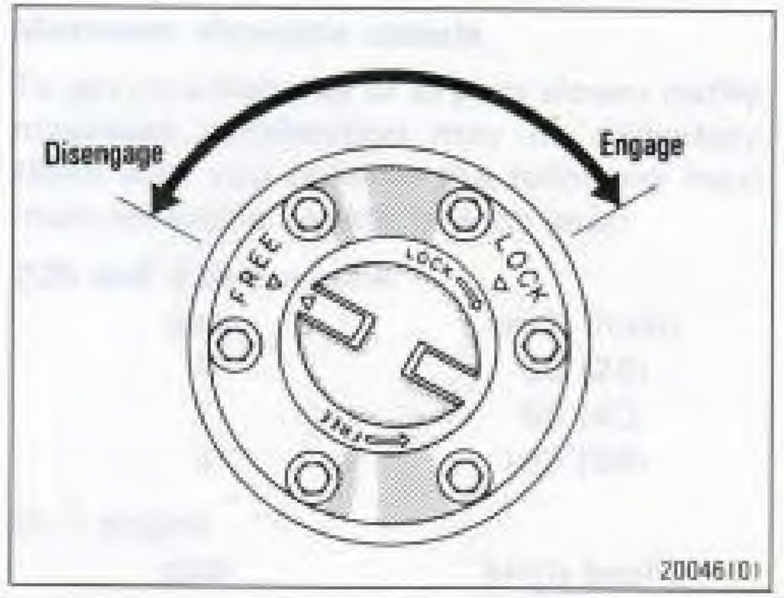

To engage the free-wheeling hubs, turn the hubs to "LOCK". To disengage, turn the hubs to "FREE".

Make sure that the triangle mark on the hub aligns with the other one at the side you wish to set.

Setting the free-wheeling hubs in "FREE" allows you to disengage the front axle and driveshaft so that they are not revolving. This reduces noise and wear when the vehicle is in two-wheel drive.

You should drive with the hubs in "LOCK" for at least 16 km (10 miles) each month. This will assure that the front drive components are lubricated.

(b) Free-wheeling hubs (electric type)

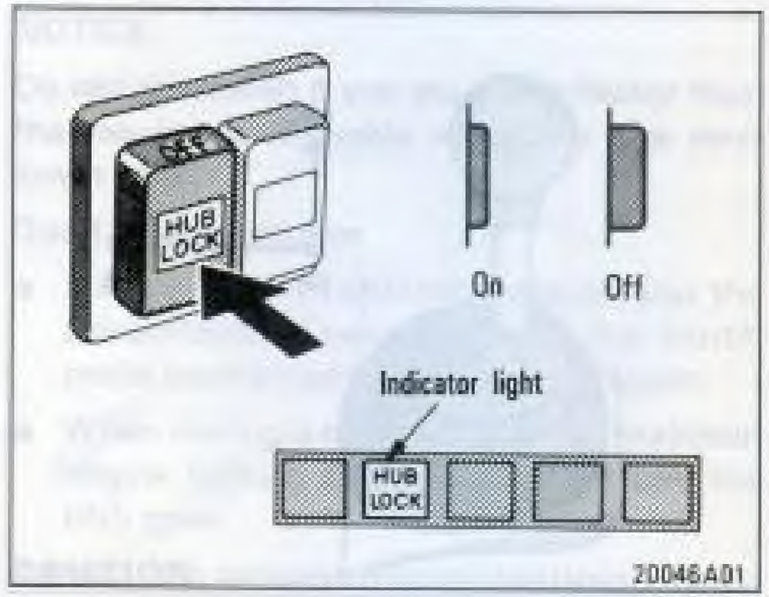

To engage the free-wheeling hubs, push the "HUB LOCK" button. To disengage, push the button once again.

The indicator light shows when the free-wheeling hubs are engaged.

If the indicator light flashes, the free-wheeling hubs are not engaged. Reduce your speed to less than 5 km/h (3 mph).

Setting the "HUB LOCK" button in the OFF position allows you to disengage the front axle and driveshaft so that they are not revolving. This reduces noise and wear when the vehicle is in two-wheel drive.

You should drive with the "HUB LOCK" button in the ON position for at least 16 km (10 miles) each month. This will assure that the front drive components are lubricated.

(c) Shifting procedure (with lever type front drive control)

SHIFTING BETWEEN "H2" AND "H4"

To shift from "H2" to "H4", move the front drive control lever with both the free-wheeling hubs engaged.

The vehicle may be moving at any speed. You need not even depress the clutch pedal. If you have trouble shifting, depress or release the accelerator pedal momentarily while pushing the front drive control lever.

CAUTION:

- **Never move the front drive control lever if wheels are slipping. Stop the slipping or spinning before shifting.**
- **Never drive with only one hub engaged.**

To shift from "H4" to "H2", simply move the front drive control lever. Disengage both the free-wheeling hubs for continued "H2" use.

The vehicle may be moving at any speed. You need not even depress the clutch pedal.

SHIFTING BETWEEN "H4" AND "L4"

To shift between "H4" and "L4", stop the vehicle or reduce your speed to less than 8 km/h (5 mph). With your foot off the accelerator pedal, depress the clutch pedal and move the front drive control lever.

(c) Shifting procedure (with lever/button type front drive control)

SHIFTING BETWEEN "H" AND "H4"

To shift from "H" to "H4", push the "H4" button in to the ON position with both the free-wheeling hubs engaged. Then release the accelerator pedal momentarily.

The vehicle may be moving at any speed. You need not even depress the clutch pedal.

CAUTION:

- **Never move the front drive control lever if wheels are slipping. Stop the slipping or spinning before shifting.**
- **Never drive with only one hub engaged.**

To shift from "H4" to "H", push the "H4" button out to the OFF position. Disengage both the free-wheeling hubs for continued "H" use.

The vehicle may be moving at any speed. You need not even depress the clutch pedal.

SHIFTING INTO "L4"

To shift from "H" or "H4" to "L4", stop the vehicle, depress the clutch pedal and move the front drive control lever with both the free-wheeling hubs engaged.

If you cannot shift, drive the vehicle slightly in either direction and try again.

To shift from "L4" to "H4" or "H", stop the vehicle, depress the clutch pedal and move the front drive control lever to the "H" position. The transfer will shift into "H4" if the "H4" button is in the ON position and into "H" if the button is out in the OFF position. Disengage both the free-wheeling hubs for continued "H" use.

If you cannot shift, drive the vehicle slightly in either direction and try again.

Front and rear differential lock system (vehicles with 1PZ or 1HZ engine)

The front and rear differential lock system is provided for use only when wheel spinning occurs in a ditch or on a slippery or ragged surface.

This differential lock system is effective in case one or either right or left pair of the wheels are spinning.

Before using the front and rear differential lock system, first shift the front drive control into "H4" or "L4" with the free-wheeling hubs engaged to see if it works. If this has no effect, additionally use the front and rear differential lock system.

CAUTION:

Do not use the front and rear differential locks in the conditions other than above. Large steering effort and careful cornering control will be required. Especially use of the front differential lock in addition to the rear will result in extremely difficult steering control and may cause the vehicle to spin suddenly during acceleration or engine braking.

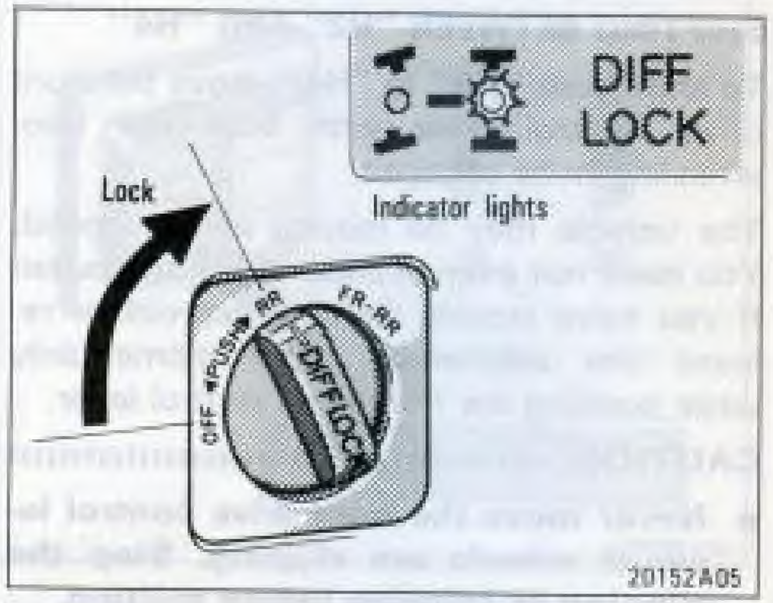

To lock the rear differential, push and turn the switch clockwise until it clicks. If this does not help, turn the switch fully clockwise to lock the front differential in addition.

Be sure to stop the wheels before locking the differentials.

For easy locking, depress the clutch pedal, turn the lock switch and slowly release the clutch pedal.

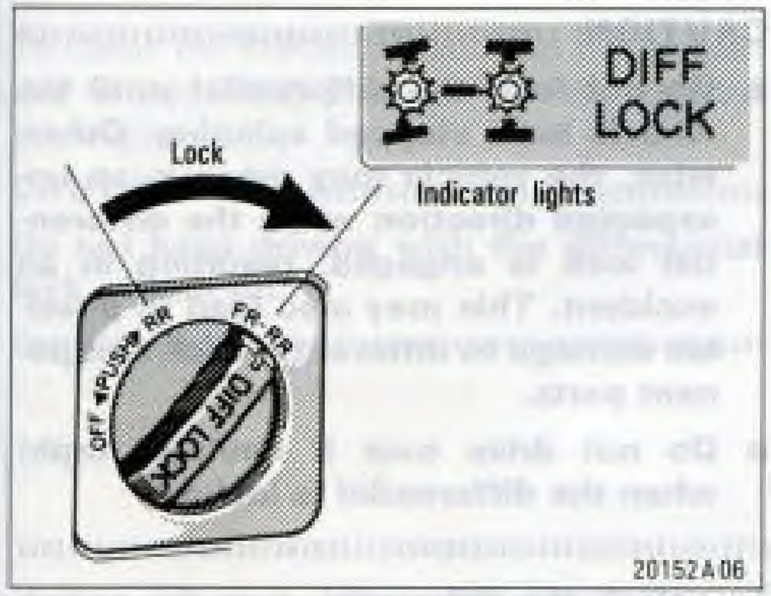

The indicator light will blink when the switch is turned on. Wait a few seconds for the system to complete operation. After the differential is locked, the light will stop blinking and remain on.

CAUTION:

- **Do not lock the differentials until the wheels have stopped spinning. Otherwise, the vehicle may move in an unexpected direction when the differential locks are engaged, resulting in an accident. This may also lead to possible damage to differential lock component parts.**
- **Do not drive over 8 km/h (5 mph) when the differentials are locked.**

To unlock the differentials, turn the switch fully counterclockwise.

Unlock the differentials as soon as the vehicle moves out.

For easy unlocking, slightly turn the steering wheel in either direction while the vehicle is in motion.

When each of the differential locks is disengaged, the indicator light will go out.

The differentials will also unlock if you shift the front drive control lever to "H2" (lever type) or "H" (lever/button type). Never forget to turn off the switch after using this feature.

To check the indicator bulb, turn the ignition key to the "ON" position, but do not start the engine.

CAUTION:

Do not keep driving with the differential lock switch on.

Rear differential lock system (vehicles with 22R, 22R-E or 2L-T engine)

The rear differential lock system is provided for use only when wheel spinning occurs in a ditch or on a slippery or ragged surface.

This differential lock system is effective in case one of the rear wheels are spinning.

Before using the rear differential lock system, first shift the front drive control into "H4" or "L4" with the free-wheeling hubs engaged to see if it works. If this has no effect, additionally use the rear differential lock system.

CAUTION:

Do not use the rear differential lock in the conditions other than above. Large steering effort and careful cornering control will be required.

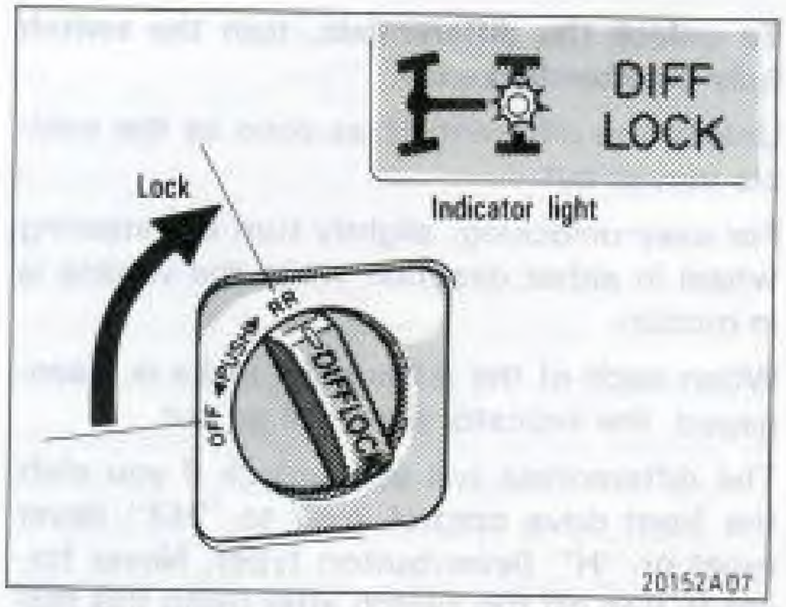

To lock the rear differential, push and turn the switch clockwise until it clicks.

Be sure to stop the wheels before locking the differential.

For easy locking, depress the clutch pedal, turn the lock switch and slowly release the clutch pedal.

The indicator light will blink when the switch is turned on. Wait a few seconds for the system to complete operation. After the differential is locked, the light will stop blinking and remain on.

CAUTION:

- **Do not lock the differential until the wheels have stopped spinning. Otherwise, the vehicle may move in an unexpected direction when the differential lock is engaged, resulting in an accident. This may also lead to possible damage to differential lock component parts.**
- **Do not drive over 8 km/h (5 mph) when the differential is locked.**

To unlock the differential, turn the switch fully counterclockwise.

Unlock the differential as soon as the vehicle moves out.

For easy unlocking, slightly turn the steering wheel in either direction while the vehicle is in motion.

When the differential lock is disengaged, the indicator light will go out.

The differential will also unlock if you shift the front drive control lever to "H2" (lever type) or "H" (lever/button type). Never forget to turn off the switch after using this feature.

To check the indicator bulb, turn the ignition key to the "ON" position, but do not start the engine.

CAUTION:

Do not keep driving with the differential lock switch on.

Parking brake

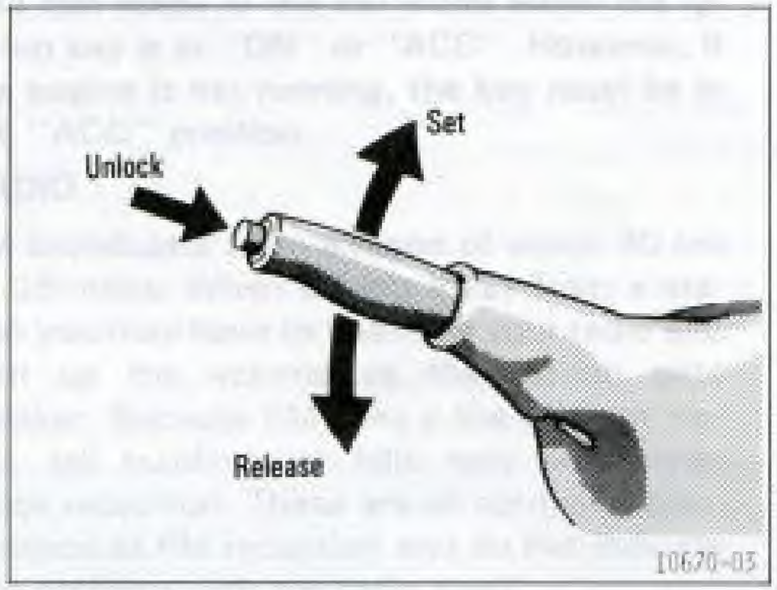

To set: Pull up the lever.
To release: Pull up slightly, press the thumb button, and lower.

Before leaving your vehicle, firmly apply the parking brake. For better holding power, first depress the brake pedal and hold it while setting the parking brake.

CAUTION:

Before driving, be sure the parking brake is fully released and the parking brake reminder light is off.

Part 1
OPERATION OF INSTRUMENTS AND CONTROLS–

Chapter 1-7
Car audio and Air conditioning system

- Car audio operating tips
- AM-FM radio with electronic tuner
- AM-FM radio with electronic tuner and cassette tape player
- Air conditioner controls
- Heater controls
- Rear heater controls
- Dashboard vents

Car audio operating tips

You can listen to the car audio when the ignition key is at "ON" or "ACC". However, if the engine is not running, the key must be in the "ACC" position.

RADIO

FM broadcasts have a range of about 40 km or 25 miles. When driving away from a station you may have to fine-tune your radio and turn up the volume as the station gets weaker. Because FM uses a line-of-sight signal, tall buildings or hills may sometimes block reception. These are all normal characteristics of FM reception and do not indicate any problem with the radio itself.

NOTICE:

To prevent damage to the antenna, make sure it is retracted before running your vehicle through an automatic car wash.

CASSETTE TAPE PLAYER

Use only cassette tapes of good quality, having no damage. Avoid using tapes with a total playing time longer than 90 minutes.

Using damaged tapes will cause trouble with the tape player. Longer tapes are not recommended because of their thinness.

Be sure that the tape is not slack and that the label is firmly stuck on the shell before insertion.

Have the tape firmly wound around the tape by turning the hub with a pencil or the like.

Be careful not to touch the exposed tape surface.

When not in use, take the cassette out of the player, put it back into its case and store it away from dust, magnets and direct sunlight.

Leaving the cassettes on the dashboard in the sun could result in damaged tapes.

Keep the playback head, capstan and pinch roller clean.

Remove tape coating residue accumulated on the head, capstan and pinch roller once or twice a month. A cleaning tape is available on the market.

NOTICE:

Do not oil any part of the tape player and do not insert metal goods or a magnet into the slot, or the tape player may be damaged.

AM-FM radio with electronic tuner (type A)

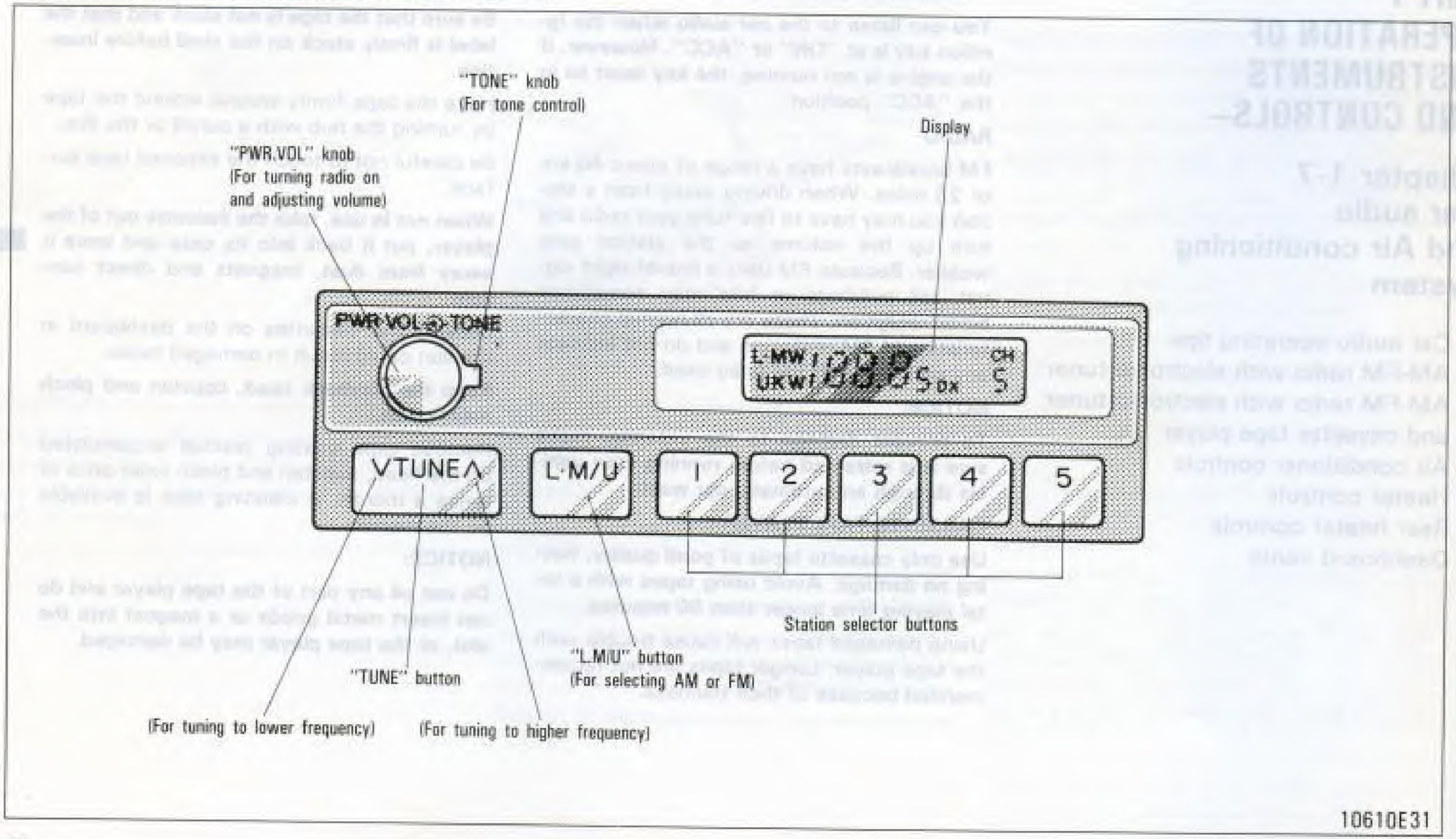

10610E31

(a) Listening to the radio

1. Turn the "PWR.VOL" knob clockwise to turn the radio on.

2. Turn the "PWR.VOL" knob to adjust the volume.

3. Tune in the desired station. (See "(b) Selecting a station" and "(c) Presetting a station".)

4. Adjust the tone. (See "(d) Adjusting the tone".)

5. To turn the radio off, turn the "PWR. VOL" knob fully counterclockwise.

(b) Selecting a station

1. Push the "L.M/U" button to select either an AM or FM broadcast. "L.MW" or "UKW" will appear on the display.

2. Tune in the desired station using one of the following methods. The frequency will appear on the display.

Preset tuning: Use for tuning-in to a desired preset station.

Push the station selector button which has been preset to the desired station. The radio will tune in to the station and the button number will appear on the display. (See "(c) Presetting a station".)

Seek tuning: Use for automatic station search and stop.

Push either side of the "TUNE" button and hold it until a beep is heard. The radio will begin seeking up or down for a station of the nearest frequency and will stop on reception. Each time you push the button, stations will be seeked out one after another.

If the radio cannot seek out any stations in one pass because of too weak signals, the radio will begin seeking again with sensitivity boosted for searching out weak stations. At this time, "DX" will appear on the display.

Manual tuning

Push either side of the "TUNE" button within 0.5 second. Each time you push the button, the radio will step up or down to another frequency where stations could exist.

(c) Presetting a station

1. Tune in the desired station. (See "(b) Selecting a station".)

2. Push one of the station selector buttons and hold it until a beep is heard. This sets the station to the button and the button number will appear on the display.

Each button can store one AM station and one FM station. To change the preset station to a different one, follow the same procedure.

The preset station will be cancelled when the power source is severed (battery disconnected, burnt fuse, etc.).

(d) Adjusting the tone

Turn the "TONE" knob.

AM-FM radio with electronic tuner (type B)

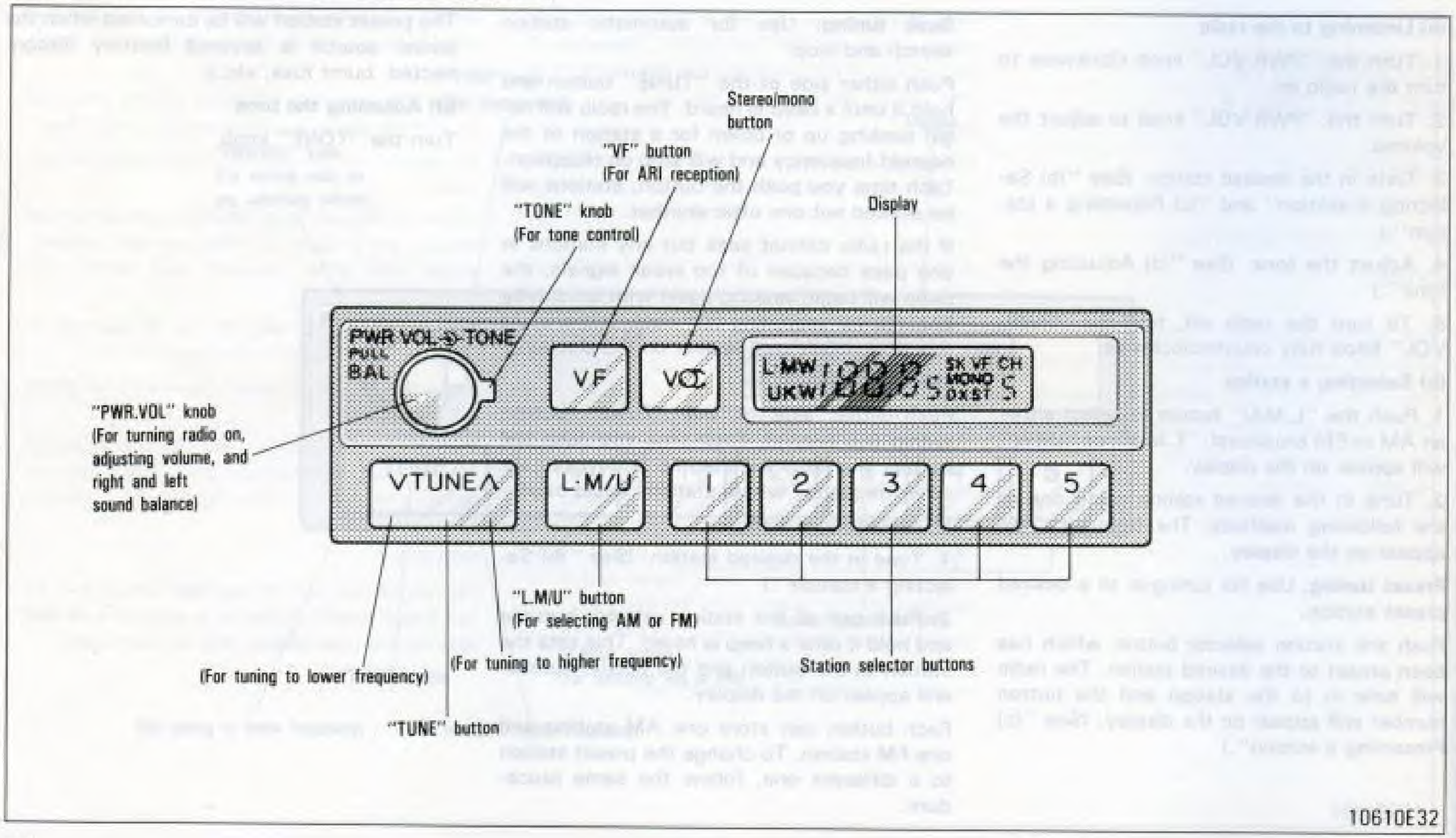

(a) Listening to the radio

1. Turn the "PWR.VOL" knob clockwise to turn the radio on.

2. Turn the "PWR.VOL" knob to adjust the volume.

3. Tune in the desired station. (See "(b) Selecting a station" and "(c) Presetting a station".)

4. If receiving an FM broadcast, select a reception mode, stereo or monaural.

The radio will change automatically to stereo reception when an FM stereo broadcast is being received. At the same time, "ST" will appear on the display. When the receiving signal gets weak, push the STEREO/MONO button to switch over to monaural reception. At this time, "MONO" will appear on the display.

5. Adjust the tone and sound balance. (See "(e) Adjusting the tone" and "(f) Adjusting the sound balance".)

6. To turn the radio off, turn the "PWR. VOL" knob fully counterclockwise.

(b) Selecting a station

1. Push the "L.M/U" button to select either an AM or FM broadcast. "L.MW" or "UKW" will appear on the display.

2. Tune in the desired station using one of the following methods. The frequency will appear on the display.

Preset tuning: Use for tuning-in to a desired preset station.

Push the station selector button which has been preset to the desired station. The radio will tune in to the station and the button number will appear on the display. (See "(c) Presetting a station".)

Seek tuning: Use for automatic station search and stop.

Push either side of the "TUNE" button and hold it until a beep is heard. The radio will begin seeking up or down for a station of the nearest frequency and will stop on reception. Each time you push the button, stations will be seeked out one after another.

If the radio cannot seek out any stations in one pass because of too weak signals, the radio will begin seeking again with sensitivity boosted for searching out weak stations. At this time, "DX" will appear on the display.

Manual tuning

Push either side of the "TUNE" button within 0.5 second. Each time you push the button, the radio will step up or down to another frequency where stations could exist.

(c) Presetting a station

1. Tune in the desired station. (See "(b) Selecting a station".)

2. Push one of the station selector buttons and hold it until a beep is heard. This sets the station to the button and the button number will appear on the display.

Each button can store one AM station and one FM station. To change the preset station to a different one, follow the same procedure.

The preset station will be cancelled when the power source is severed (battery disconnected, burnt fuse, etc.).

(d) Receiving ARI (traffic information)

1. Push the "L.M/U" button to select FM. "UKW" will appear on the display.

2. Push the "VF" button. The radio will switch to the ARI mode and "VF" will appear on the display.

3. Tune in the desired station that broadcasts ARI. (See "(b) Selecting a station".) As the radio tunes in to a station that broadcast ARI, "SK" will appear on the display.

4. Push the "VF" button once again to cancel the ARI mode.

(e) Adjusting the tone

Turn the "TONE" knob.

(f) Adjusting the sound balance

Pull the "PWR.VOL" knob and turn it.

AM-FM radio with electronic tuner and cassette tape player

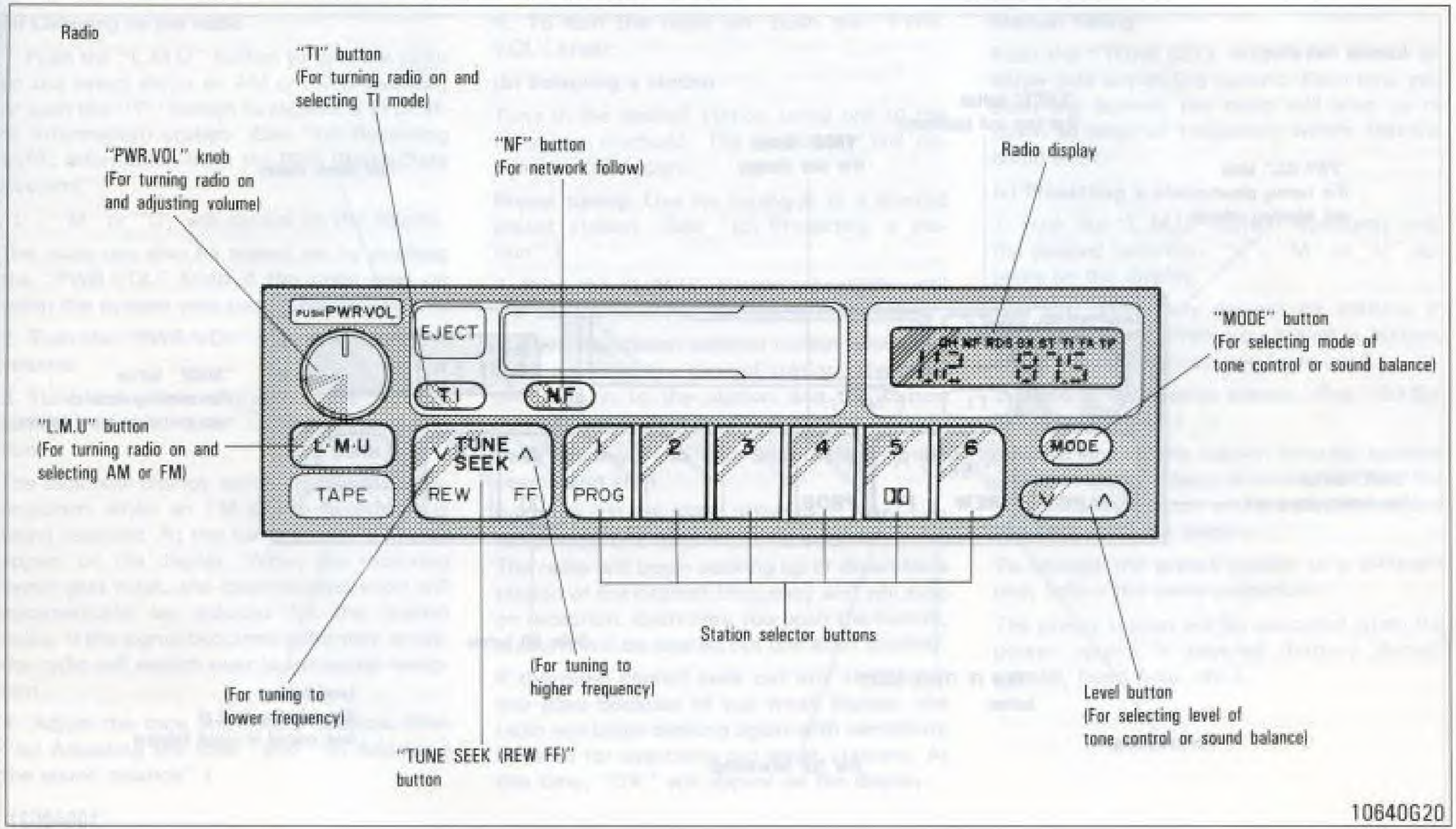

Cassette tape player

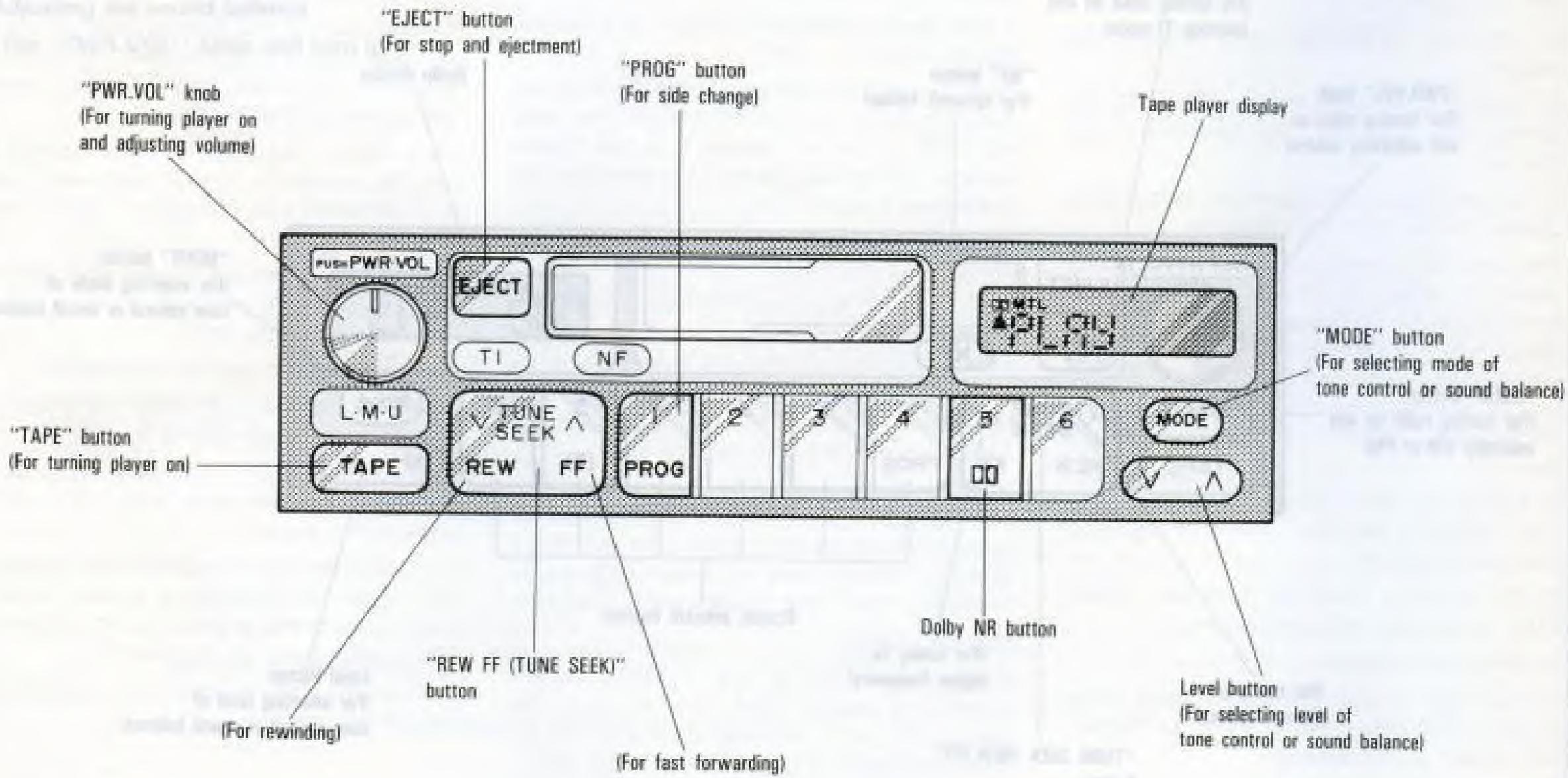

10640G21

(a) Listening to the radio

1. Push the "L.M.U" button to turn the radio on and select either an AM or FM broadcast, or push the "TI" button to receive a TI (Traffic Information) station. (See "(d) Receiving traffic information from the RDS (Radio Data System)".)

"L", "M" or "U" will appear on the display.

The radio can also be turned on by pushing the "PWR.VOL" knob if the radio was on when the system was turned off.

2. Turn the "PWR.VOL" knob to adjust the volume.

3. Tune in the desired station. (See "(b) Selecting a station" and "(c) Presetting a station".)

The radio will change automatically to stereo reception when an FM stereo broadcast is being received. At the same time, "ST" will appear on the display. When the receiving signal gets weak, the channel separation will automatically be reduced for the lowest noise. If the signal becomes extremely weak, the radio will switch over to monaural reception.

4. Adjust the tone and sound balance. (See "(e) Adjusting the tone" and "(f) Adjusting the sound balance".)

5. To turn the radio off, push the "PWR. VOL" knob.

(b) Selecting a station

Tune in the desired station using one of the following methods. The frequency will appear on the display.

Preset tuning: Use for tuning-in to a desired preset station. (See "(c) Presetting a station".)

1. Push the "L.M.U" button repeatedly until the desired selection appears on the display.

2. Push the station selector button which has been preset to the desired station. The radio will tune in to the station and the button number will appear on the display.

Seek tuning: Use for automatic station search and stop.

Push the "TUNE SEEK (REW FF)" button on either side and hold it until a beep is heard. The radio will begin seeking up or down for a station of the nearest frequency and will stop on reception. Each time you push the button, stations will be seeked out one after another.

If the radio cannot seek out any stations in one pass because of too weak signals, the radio will begin seeking again with sensitivity boosted for searching out weak stations. At this time, "DX" will appear on the display.

Manual tuning

Push the "TUNE SEEK (REW FF)" button on either side within 0.5 second. Each time you push the button, the radio will step up or down to another frequency where stations could exist.

(c) Presetting a station

1. Push the "L.M.U" button repeatedly until the desired selection, "L", "M" or "U" appears on the display.

You can preset any desired six stations in each selection. When you preset a station, check which selection you have used.

2. Tune in the desired station. (See "(b) Selecting a station".)

3. Push one of the station selector buttons and hold it until a beep is heard. This sets the station to the button and the button number will appear on the display.

To change the preset station to a different one, follow the same procedure.

The preset station will be cancelled when the power source is severed (battery disconnected, burnt fuse, etc.).

(d) Receiving traffic information from the RDS (Radio Data System)

1. The radio will automatically switch to the RDS mode to receive an RDS station while tuned to FM broadcasts. At this time, "RDS" and the name of the RDS station will appear on the display.

When you tune in a new FM station with RDS mode, the new frequency will appear on the display for 5 seconds before the name appears.

2. Tune in the desired station that broadcasts traffic information by using one of the following methods. When the radio receives a station which broadcasts traffic information, "TP" (Traffic Program) will also appear on the display. You can then listen to regular programs and to traffic information between the regular programs.

Preset tuning, seek tuning and manual tuning: Use for tuning-in to a desired station. (See "(b) Selecting a station.")

TI (Traffic Information) tuning: Use for receiving TI stations all over the band.

a. The radio is switched to the TI mode by pushing the "TI" button. At this time, "TI" will appear on the display.

If the radio does not receive a TI station for 20 seconds after the "TI" button is pushed, the radio will begin seeking a TI station by using the AF(Alternative Frequencies) list from the TI station and will stop on receiving a TI station. A beep will sound and "SEARCH" will appear on the display to tell you when this feature starts operation.

If the radio cannot find any station in one pass because the signals are too weak, the radio will begin seeking again with sensitivity boosted to search out weak stations. At this time, "DX" will appear on the display. If the signal gets extremely weak, the radio will stop seeking a station and "NOTHING" will appear on the display for 2 seconds. After this, if the radio cannot receive a TI station for 20 seconds, the radio will begin seeking again.

When "TI" appears on the display, the radio will receive a TI station only if seek tuning is used.

b. If the selected station is broadcasting another program when traffic information is desired, push the "TI" button until "TA" (Traffic Anouncement) appears. When"TA" appears on the display, the radio mutes all programs but the traffic program or, if a cassette is inserted in the slot, the cassette will be played until traffic information begins. When the traffic information ends or the signal gets weak, the initial programming is resumed.

c. To return to normal mode from the TI mode, push the "TI" button until "TI" and "TA" disappear from the display.

RDS auto tuning: Use for seeking RDS stations all over the band.

a. Push the "NF" (Network Follow) button for less than 2 seconds to receive the same program while tuning in an RDS station. At this time, "NF" will appear on the display. When reception conditions worsen, a network which broadcasts the same program will be selected using the AF list from the RDS station.

To change the NF mode, push the "NF" button for at least 2 seconds. When "REG ON" appears on the display, the radio will select the RDS station which has the same PI (Program Identification) code. When "REG OFF" appears on the display, the radio will select the RDS station which has the same three-digit number PI code.

b. If the radio cannot find an RDS station for 40 seconds, the radio will mute all the programs and begin seeking an RDS station of the same PI code by using the AF list. If the radio cannot seek out any station in one pass because the signals are too weak, the radio will begin seeking all the FM broadcasts again. A beep will sound and "SEARCH" will appear on the display to tell you when this feature starts operation.

If the signal gets extremely weak, the radio will stop seeking a station and "NOTHING" will appear on the display for 2 seconds.

c. If a cassette is inserted in the slot with "NF" appearing on the display, the cassette can be played until an FM station is received.

d. To cancel the NF mode, push the "NF" button twice. "NF" will then disappear from the display.

(e) Adjusting the tone

To adjust a low-pitch tone, push the "MODE" button repeatedly until "BASS O" appears on the display, then push the level button (to either the left or right side) to suit your preference. The low-pitch tone level can be changed from "BASS −10" to "BASS +10" and the level will appear on the display.

To adjust a high-pitch tone, push the "MODE" button repeatedly until "TREB O" appears on the display, then push the level button (to either the left or right side) to suit your preference. The high-pitch tone level can be changed from "TREB −10" to "TREB +10" and the level will appear on the display.

(f) Adjusting the sound balance

Two-speaker models—

To balance the sound between the right and left speakers, push the "MODE" button repeatedly until "BAL O" appears on the display, then push the level button (to either the left or right side) to suit your preference. The sound balance of the left and right speakers can be changed from "BAL L14" to "BAL R14" and the sound balance will appear on the display.

Four-speaker models—

To balance the sound between the right and left speakers, push the "MODE" button repeatedly until "BAL O" appears on the display, then push the level button (to either the left or right side) to suit your preference. The sound balance of the left and right speakers can be changed from "BAL L14" to "BAL R14" and the sound balance will appear on the display.

To balance the sound between the front and rear speakers, then push the "MODE" button repeatedly until "FADE O" appears onthe display, then push the level button (to either the left or right side) to suit your preference. The sound balance of the front and rear speakers can be changed from "FADE F14" to "FADE R14" and the sound balance will appear onthe display.

(g) Listening to the cassette tape

1. Put the cassette into the slot, with the tape side to the right and lightly push it in. The tape player will grab the cassette and slide it into place to play it. If the radio is on when inserting the cassette, the radio will automatically turn off.

If the cassette is already in the slot, push the "TAPE" button.

At this time, "PLAY" will appear on the display.

The tape player can also be turned on by pushing the "PWR.VOL" knob if the tape player was playing when the system was turned off by pushing the knob.

When a metal or chrome equivalent tape is inserted, the player will automatically adapt to it and "MTL" will appear on the display.

2. If using a tape recorded with Dolby NR*, push the DOLBY NR button. The Dolby noise reduction system will operate. To play a tape recorded without Dolby NR*, push the button once again.

* Dolby noise reduction manufactured under license from Dolby Laboratories Licensing Corporation. "DOLBY" and the double-D symbol DD are trademarks of Dolby Laboratories Licensing Corporation.

3. Turn the "PWR.VOL" knob to adjust the volume.

4. Select your program. (See "(h) Selecting a program".)

5. Adjust the tone and sound balance. (See "(e) Adjusting the tone" and "(f) Adjusting the sound balance".)

6. To turn the player off, push the "PWR. VOL" knob.

7. To eject the cassette, push the "EJECT" button. As this is done, the player will turn off. If the radio was on when the cassette tape was inserted, it will automatically turn on again.

The key can be at any position to eject the cassette.

(h) Selecting a program

1. Push the "PROG" button to select a side to play. The tapthe tape. At this time, "FF" or "REW" will appear on the display. To stop either fast forwarding or rewinding, push the "TAPE" button. The tape will resume playing.

The player will automatically reverse directions at the end of the tape to play the other side.

2. Push the "REW FF (TUNE)" button on either side to fast forward or rewind the tape. At this time, "FF" or "REW" will appear on the display. To stop either fast forwarding or rewinding, push the "TAPE" button. The tape will resume playing.

Air conditioner controls

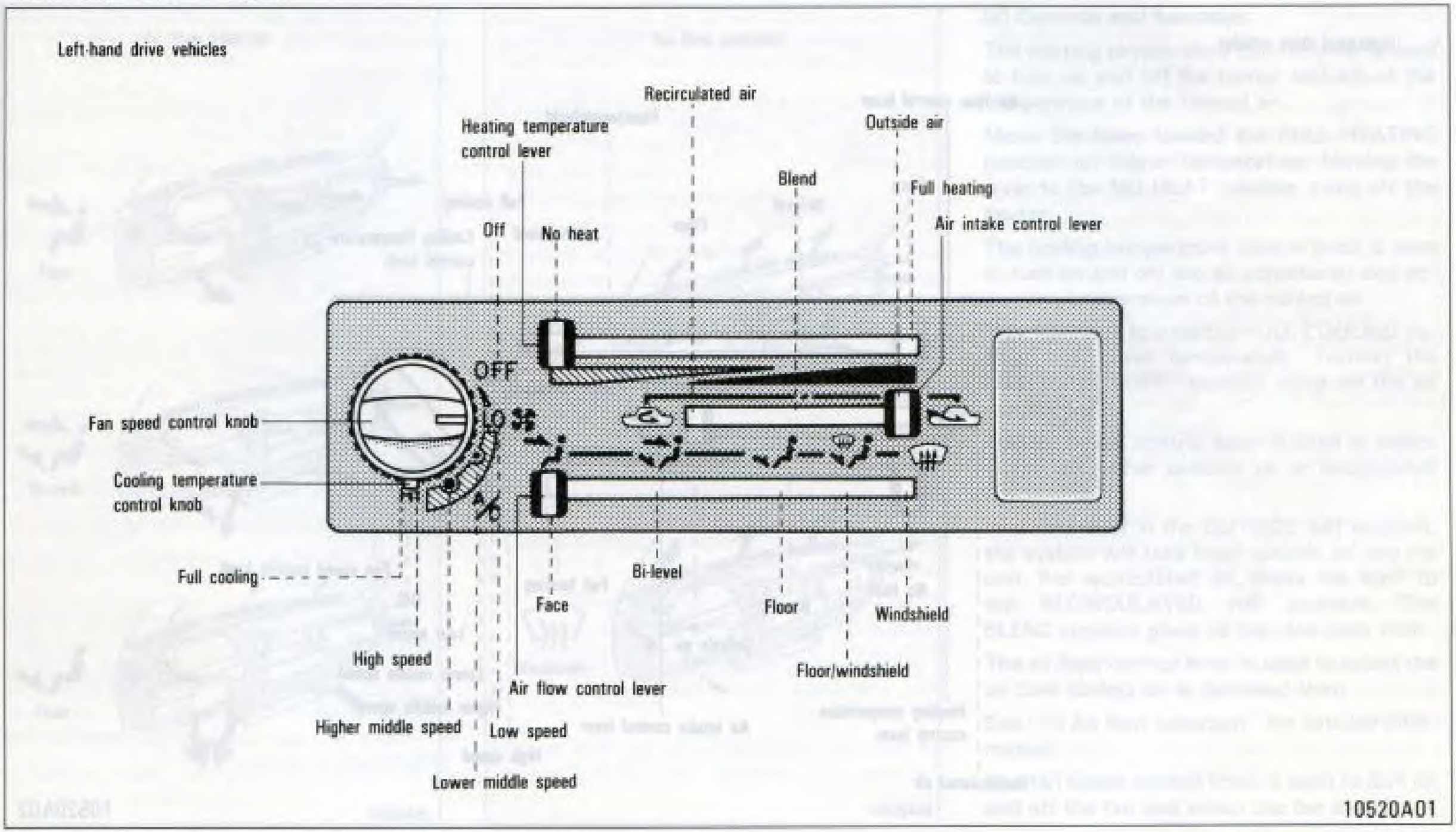

Right-hand drive vehicles

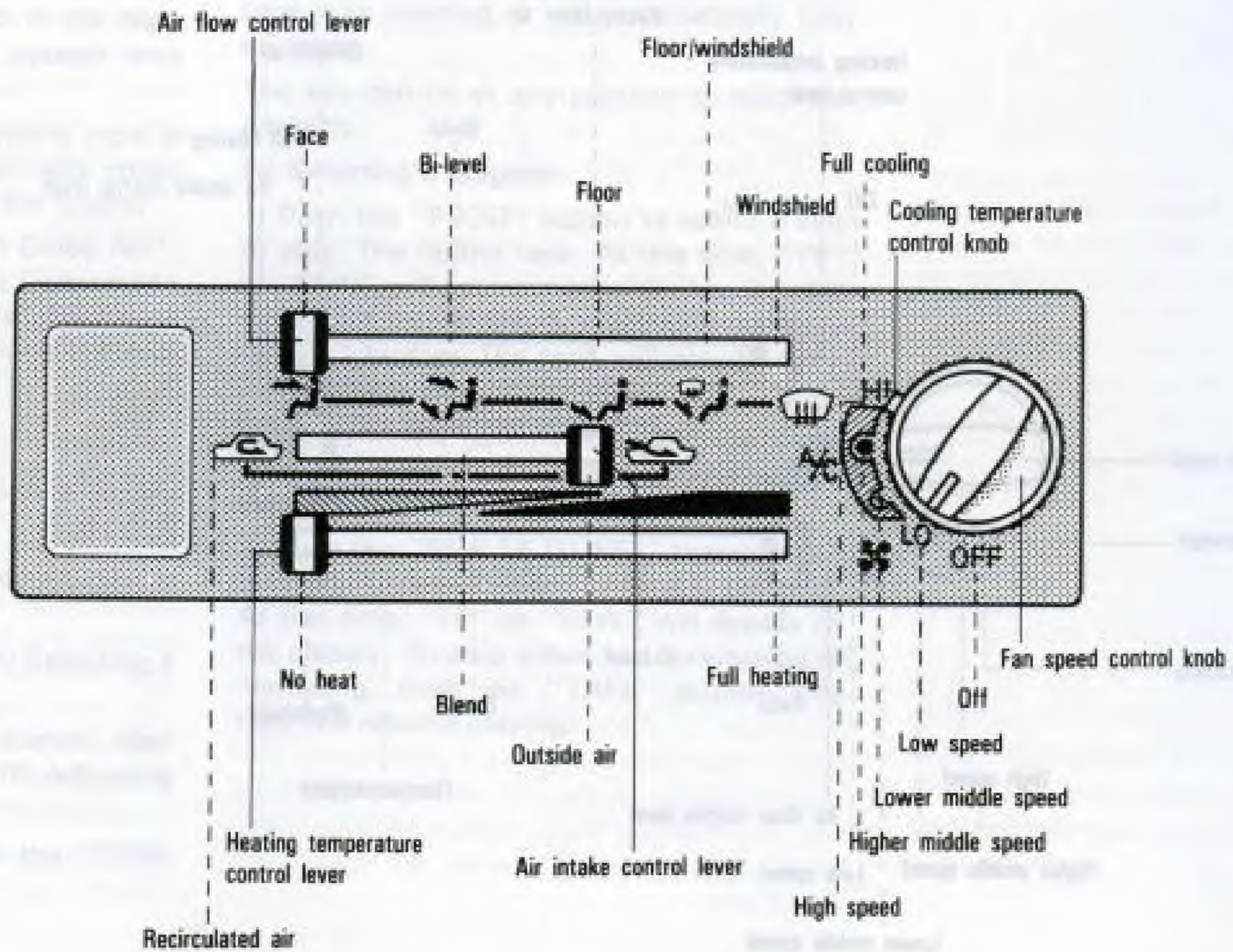

10520A02

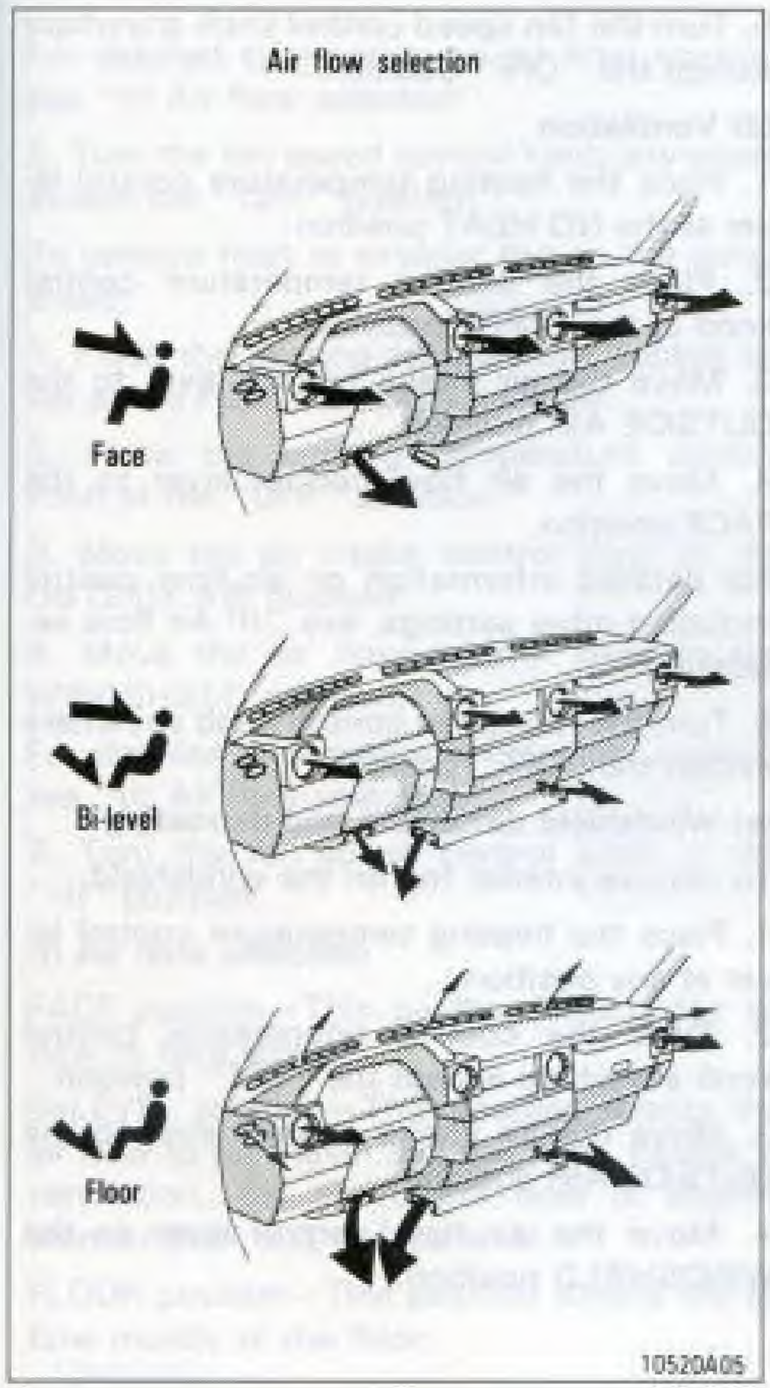

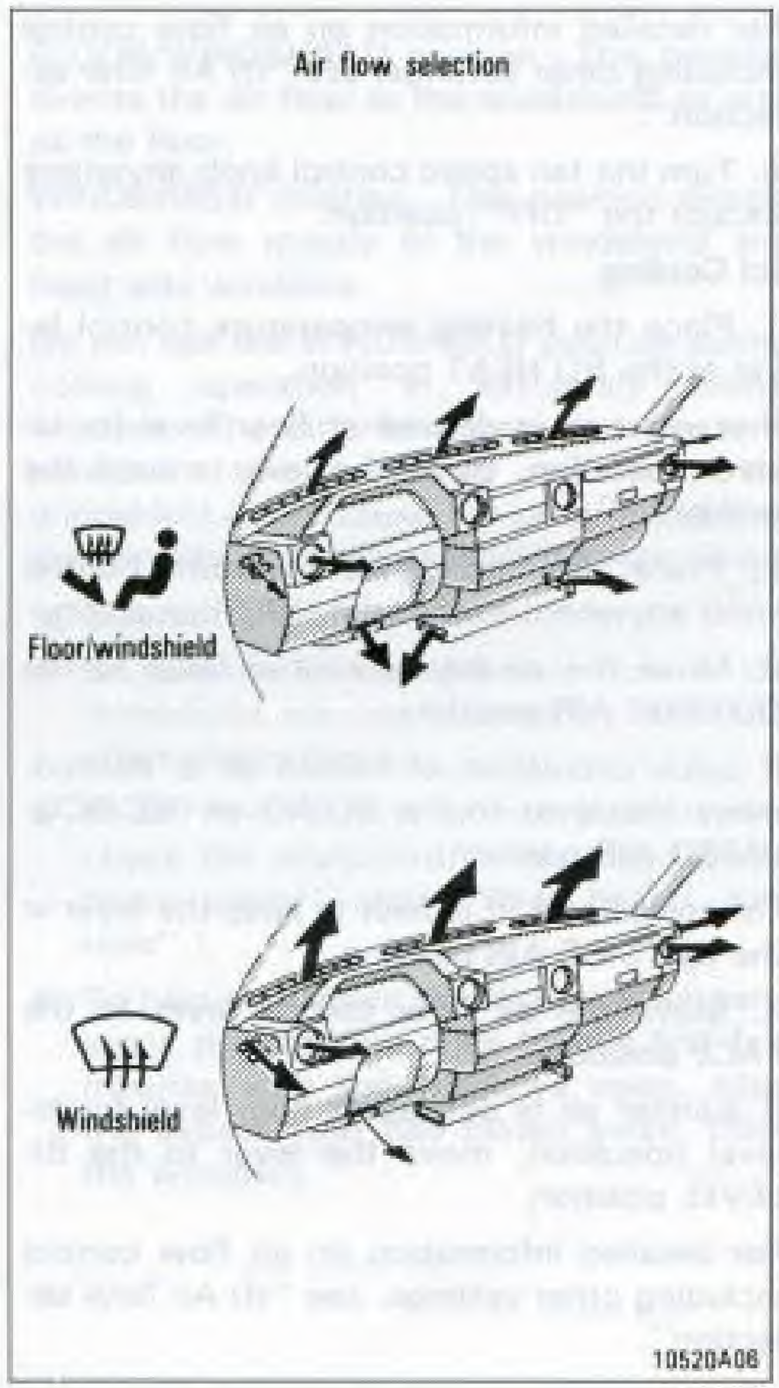

(a) Controls and functions

The heating temperature control lever is used to turn on and off the heater and adjust the temperature of the heated air.

Move the lever toward the FULL HEATING position for higher temperature. Moving the lever to the NO HEAT position turns off the heater.

The cooling temperature control knob is used to turn on and off the air conditioner and adjust the temperature of the cooled air.

Turn the knob toward the FULL COOLING position for lower temperature. Turning the knob to the "OFF" position turns off the air conditioner.

The air intake control lever is used to select intake air, either outside air or recirculated air.

With the lever in the OUTSIDE AIR position, the system will take fresh outside air into the unit. For recirculated air, move the lever to the RECIRCULATED AIR position. The BLEND position gives air blended from both.

The air flow control lever is used to select the air flow outlets air is delivered from.

See "(f) Air flow selection" for detailed information.

The fan speed control knob is used to turn on and off the fan and select the fan speed.

The higher the fan speed setting is, the more air is delivered. Turning the knob to the "OFF" position turns off the fan.

(b) Heating

1. Place the heating temperature control lever anywhere except the NO HEAT position.

If cooler air is desired at face level for bi-level operation, place the lever around the middle.

2. Place the cooling temperature control knob at the "OFF" position.

If dehumidified heating is desired, place the knob at the FULL COOLING position.

3. Move the air intake control lever to the OUTSIDE AIR position.

If quick circulation of heated air is desired, move the lever to the BLEND or the RECIRCULATED AIR position.

For normal use, it is best to keep the lever in the OUTSIDE AIR position. Otherwise the windows will fog up more easily.

4. Move the air flow control lever to the FLOOR position.

If cooler air is desired at face level for bi-level operation, move the lever to the BI-LEVEL position.

If the windshield fogs up easily, move the lever to the FLOOR/WINDSHIELD position.

For detailed information on air flow control including other settings, see "(f) Air flow selection".

5. Turn the fan speed control knob anywhere except the "OFF" position.

(c) Cooling

1. Place the heating temperature control lever at the NO HEAT position.

If warmer air is desired at floor level for bi-level operation, place the lever around the middle.

2. Place the cooling temperature control knob anywhere except the "OFF" position.

3. Move the air intake control lever to the OUTSIDE AIR position.

If quick circulation of cooled air is desired, move the lever to the BLEND or RECIRCULATED AIR position.

For normal use, it is best to keep the lever in the OUTSIDE AIR position.

4. Move the air flow control lever to the FACE position.

If warmer air is desired at floor level for bi-level operation, move the lever to the BI-LEVEL position.

For detailed information on air flow control including other settings, see "(f) Air flow selection".

5. Turn the fan speed control knob anywhere except the "OFF" position.

(d) Ventilation

1. Place the heating temperature control lever at the NO HEAT position.

2. Place the cooling temperature control knob at the "OFF" position.

3. Move the air intake control lever to the OUTSIDE AIR position.

4. Move the air flow control lever to the FACE position.

For detailed information on air flow control including other settings, see "(f) Air flow selection".

5. Turn the fan speed control knob anywhere except the "OFF" position.

(e) Windshield defogging and defrosting

To remove interior fog on the windshield;

1. Place the heating temperature control lever at any position.

2. Place the cooling temperature control knob anywhere except the "OFF" position.

3. Move the air intake control lever to the OUTSIDE AIR position.

4. Move the air flow control lever to the WINDSHIELD position.

For detailed information on air flow control, see "(f) Air flow selection".

5. Turn the fan speed control knob anywhere except the "OFF" position.

To remove frost or exterior fog on the windshield;

1. Place the heating temperature control lever at the FULL HEATING position.

2. Place the cooling temperature control knob at the "OFF" position.

3. Move the air intake control lever to the OUTSIDE AIR position.

4. Move the air flow control lever to the WINDSHIELD position.

For detailed information on air flow control, see "(f) Air flow selection".

5. Turn the fan speed control knob to the "HI" position.

(f) Air flow selection

FACE position—This position directs the air flow to face level.

BI-LEVEL position—This position directs the air flow to face level and the floor. Except in ventilation, the air to the floor is slightly warmer than that to face level.

FLOOR position—This position directs the air flow mostly to the floor.

FLOOR/WINDSHIELD position—This position directs the air flow to the windshield as well as the floor.

WINDSHIELD position—This position directs the air flow mostly to the windshield and front side windows.

Do not use the WINDSHIELD position during cooling operation in extremely humid weather. The difference between the temperature of the outside air and that of the windshield could cause the outer surface of the windshield to fog up blocking your vision.

(g) Operating tips

- Be sure the air inlet grilles in front of the windshield are not blocked by leaves or other obstructions.
- If air flow control is not satisfactory, check the dashboard vents. (See "Dashboard vents" after "Rear heater controls".)
- To help cool down the interior after parking in the hot sun, drive for the first few minutes with the windows open. After the excess heat has blown away, close the windows.
- When driving on dusty roads, close all windows. If dust thrown up by the vehicle is still drawn into the vehicle after closing the windows, it is recommended that the air intake control lever be set to the OUTSIDE AIR position and the fan speed control knob anywhere except the "OFF" position.
- If following another vehicle on a dusty road, or driving in windy and dusty conditions, it is recommended that the air intake control lever be temporarily set to the RECIRCULATED AIR position, which will close off the outside passage and prevent outside air and dust from entering the vehicle interior.

Heater controls

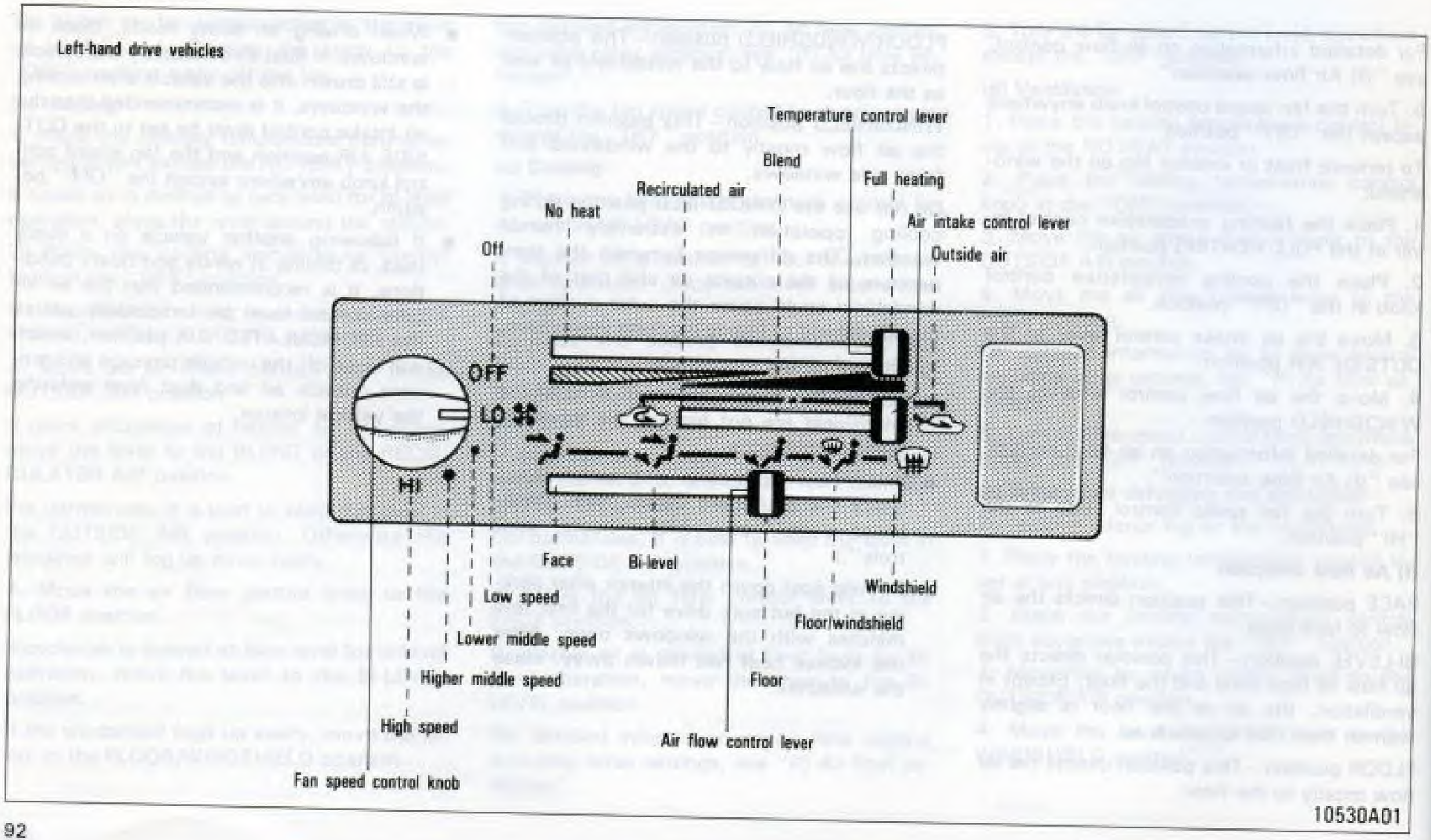

Right-hand drive vehicles

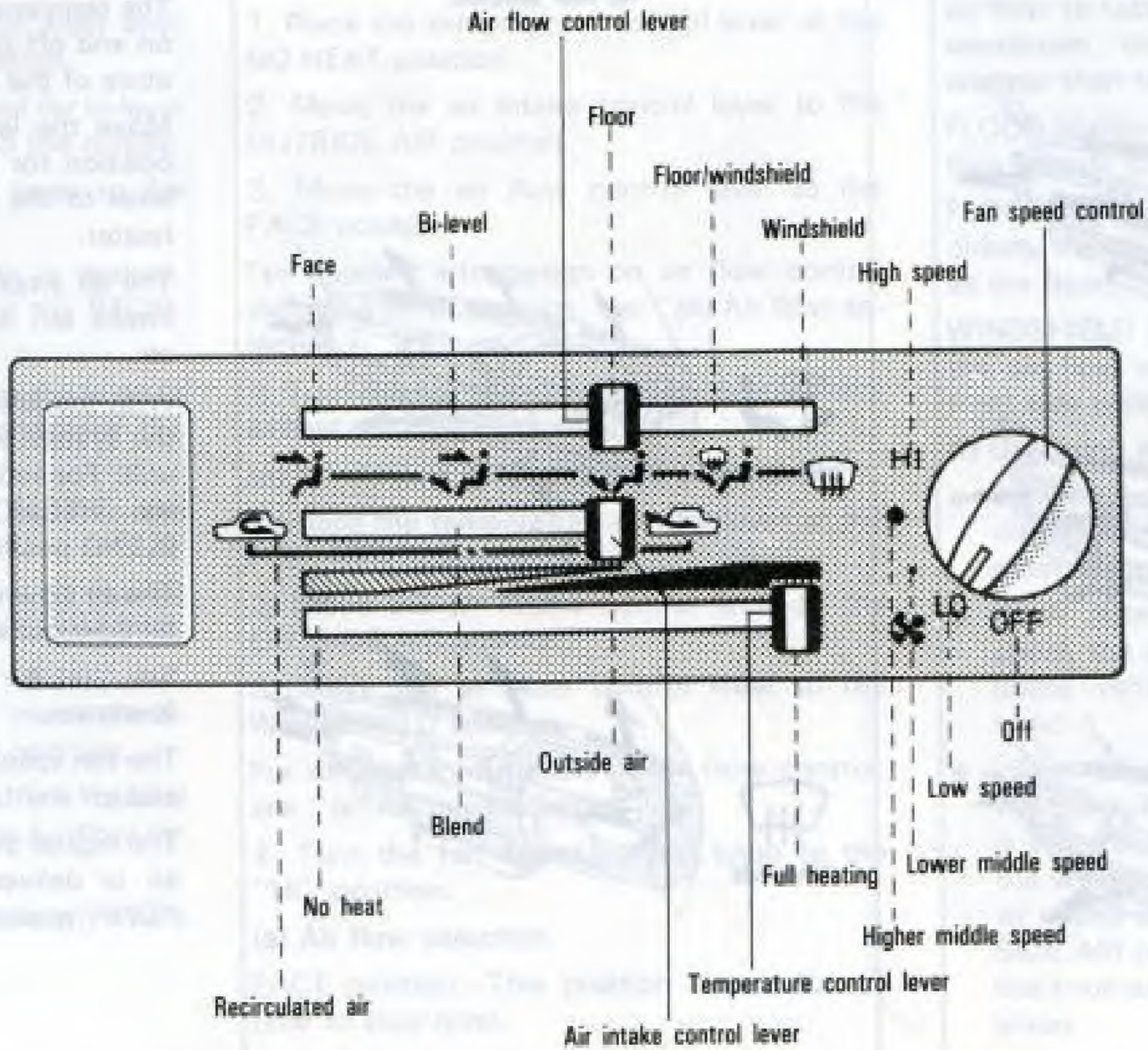

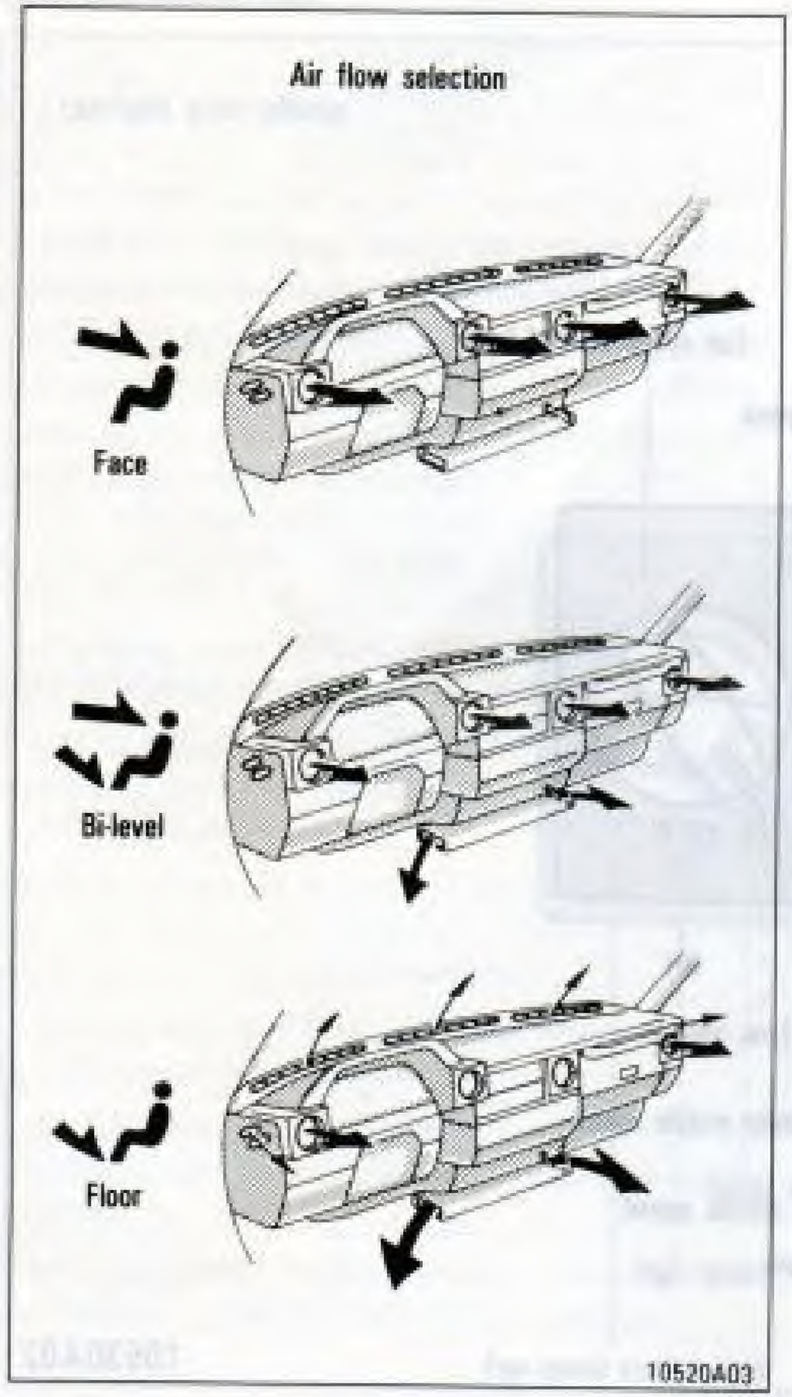

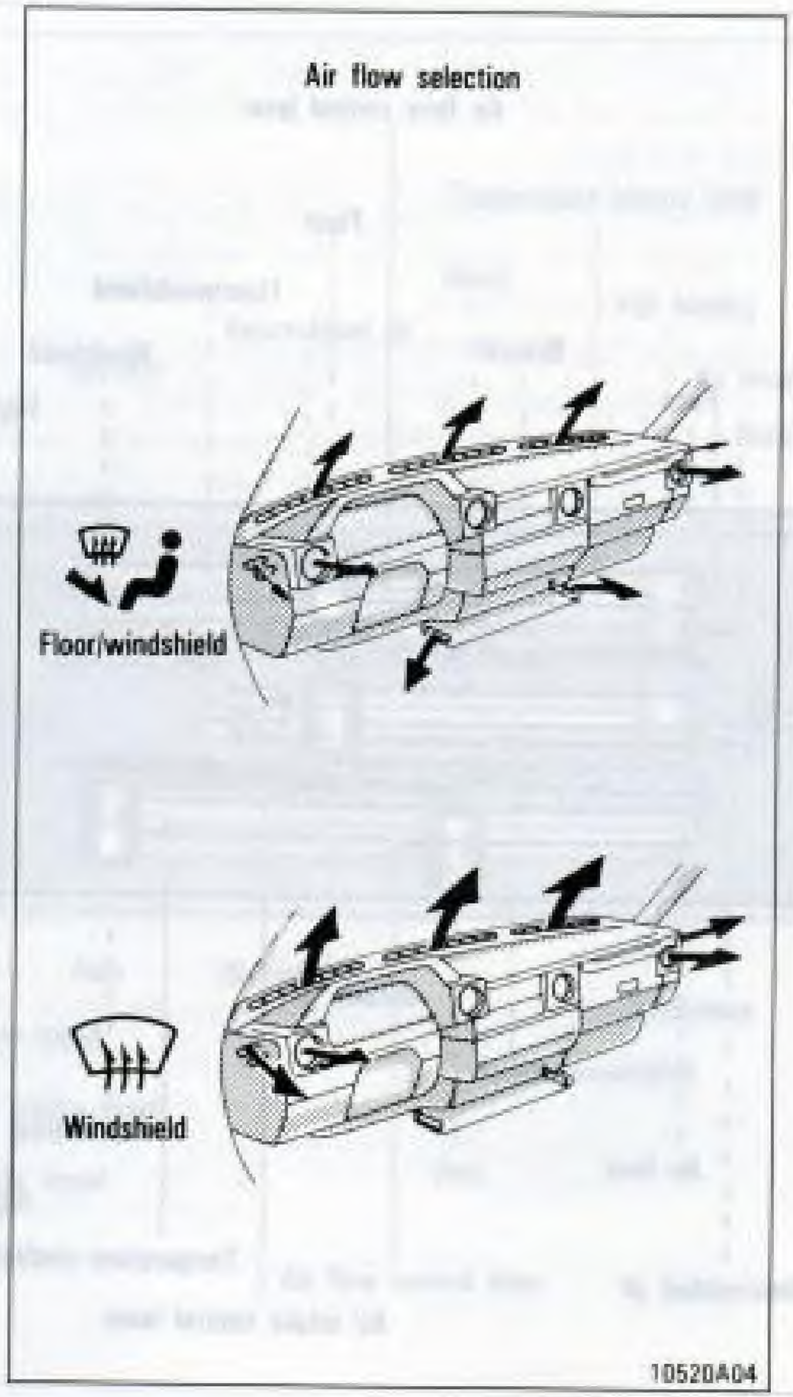

(a) Controls and functions

The temperature control lever is used to turn on and off the heater and adjust the temperature of the heated air.

Move the lever toward the FULL HEATING position for higher temperature. Moving the lever to the NO HEAT position turns off the heater.

The air intake control lever is used to select intake air, either outside air or recirculated air.

With the lever in the OUTSIDE AIR position, the system will take fresh outside air into the unit. For recirculated air, move the lever to the RECIRCULATED AIR position. The BLEND position gives air blended from both.

The air flow control lever is used to select the air flow outlets air is delivered from.

See "(e) Air flow selection" for detailed information.

The fan speed control knob is used to turn on and off the fan and select the fan speed.

The higher the fan speed setting is, the more air is delivered. Turning the knob to the "OFF" position turns off the fan.

(b) Heating

1. Place the temperature control lever anywhere except the NO HEAT position.

If cooler air is desired at face level for bi-level operation, place the lever around the middle.

2. Move the air intake control lever to the OUTSIDE AIR position.

If quick circulation of heated air is desired, move the lever to the BLEND or the RECIRCULATED AIR position.

For normal use, it is best to keep the lever in the OUTSIDE AIR position. Otherwise the windows will fog up more easily.

3. Move the air flow control lever to the FLOOR position.

If cooler air is desired at face level for bi-level operation, move the lever to the BI-LEVEL position.

If the windshield fogs up easily, move the lever to the FLOOR/WINDSHIELD position.

For detailed information on air flow control including other settings, see "(e) Air flow selection".

4. Turn the fan speed control knob anywhere except the "OFF" position.

(c) Ventilation

1. Place the temperature control lever at the NO HEAT position.

2. Move the air intake control lever to the OUTSIDE AIR position.

3. Move the air flow control lever to the FACE position.

For detailed information on air flow control including other settings, see "(e) Air flow selection".

4. Turn the fan speed control knob anywhere except the "OFF" position.

(d) Windshield defogging and defrosting

1. Place the temperature control lever at the FULL HEATING position.

2. Move the air intake control lever to the OUTSIDE AIR position.

3. Move the air flow control lever to the WINDSHIELD position.

For detailed information on air flow control, see "(e) Air flow selection".

4. Turn the fan speed control knob to the "HI" position.

(e) Air flow selection

FACE position—This position directs the air flow to face level.

BI-LEVEL position—This position directs the air flow to face level and the floor. Except in ventilation, the air to the floor is slightly warmer than that to face level.

FLOOR position—This position directs the air flow mostly to the floor.

FLOOR/WINDSHIELD position—This position directs the air flow to the windshield as well as the floor.

WINDSHIELD position—This position directs the air flow mostly to the windshield and front side windows.

(f) Operating tips

- Be sure the air inlet grilles in front of the windshield are not blocked by leaves or other obstructions.
- If air flow control is not satisfactory, check the dashboard vents. (See "Dashboard vents" after "Rear heater controls".)
- When driving on dusty roads, close all windows. If dust thrown up by the vehicle is still drawn into the vehicle after closing the windows, it is recommended that the air intake control lever be set to the OUTSIDE AIR position and the fan speed control knob anywhere except the "OFF" position.

- If following another vehicle on a dusty road, or driving in windy and dusty conditions, it is recommended that the air intake control lever be temporarily set to the RECIRCULATED AIR position, which will close off the outside passage and prevent outside air and dust from entering the vehicle interior.

Rear heater controls

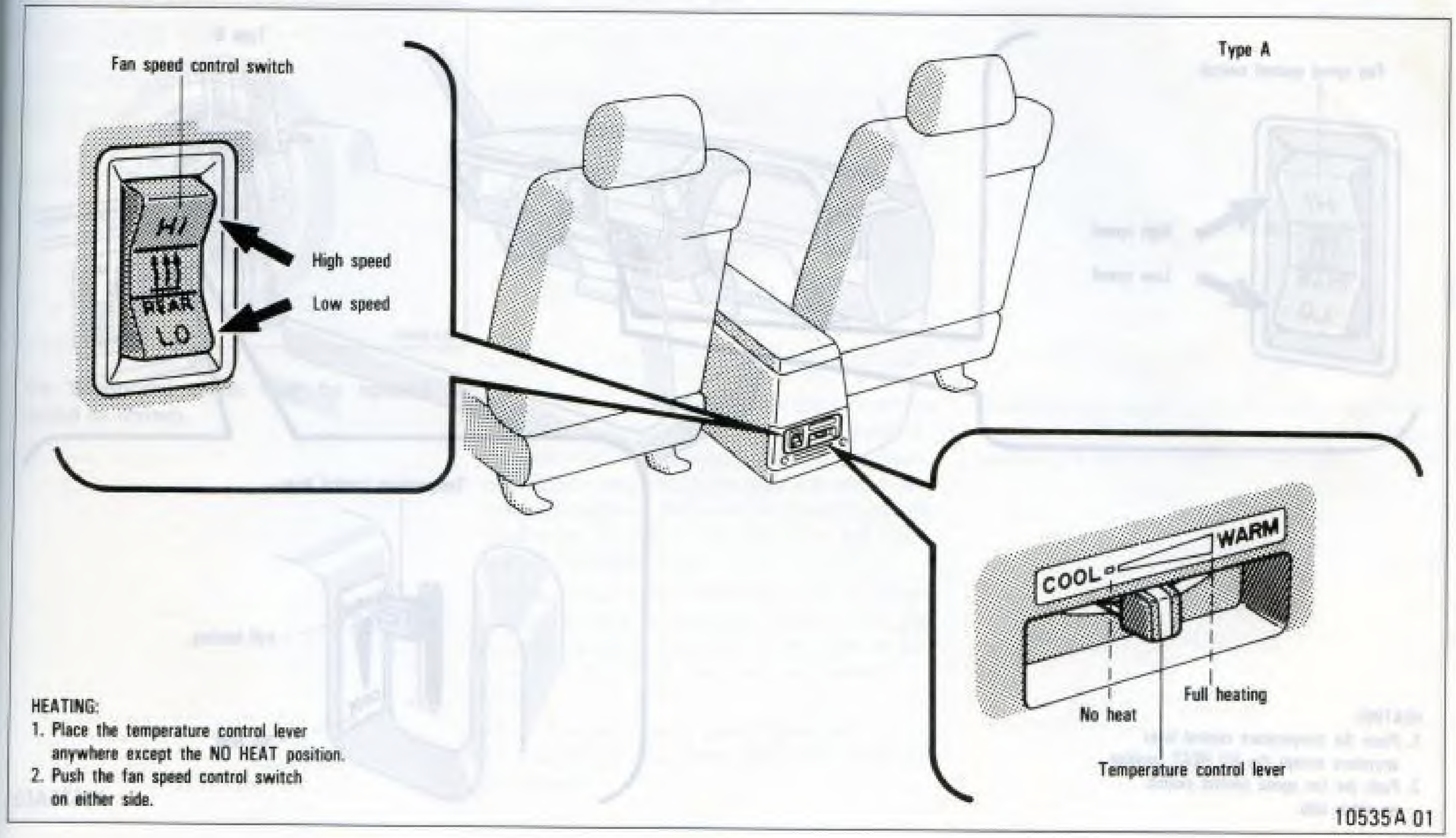

HEATING:

1. Place the temperature control lever anywhere except the NO HEAT position.
2. Push the fan speed control switch on either side.

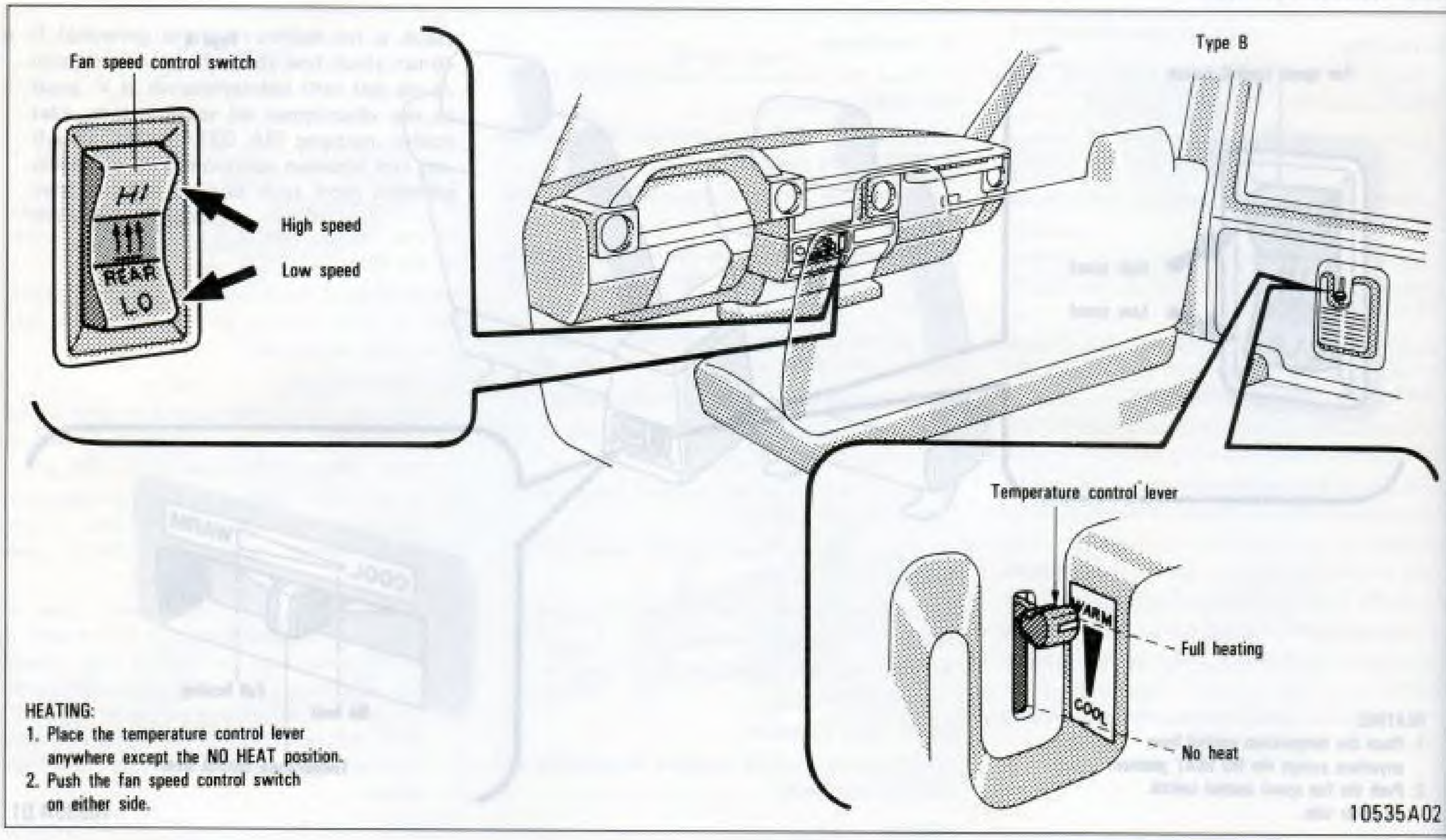

HEATING:

1. Place the temperature control lever anywhere except the NO HEAT position.
2. Push the fan speed control switch on either side.

Dashboard vents

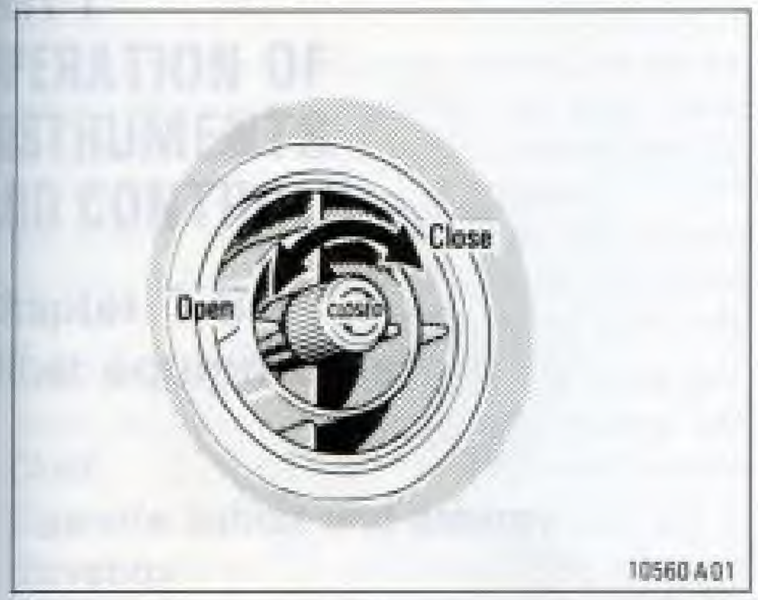

The dashboard vents may be opened or closed as shown.

Part 1
OPERATION OF INSTRUMENTS AND CONTROLS—

Chapter 1-8
Other equipments

- Clock
- Cigarette lighter and ashtray
- Glovebox
- Tie-down hooks
- Pintle hook
- Mechanical winch
- Electric winch
- Power outlet box

Clock (standard type)

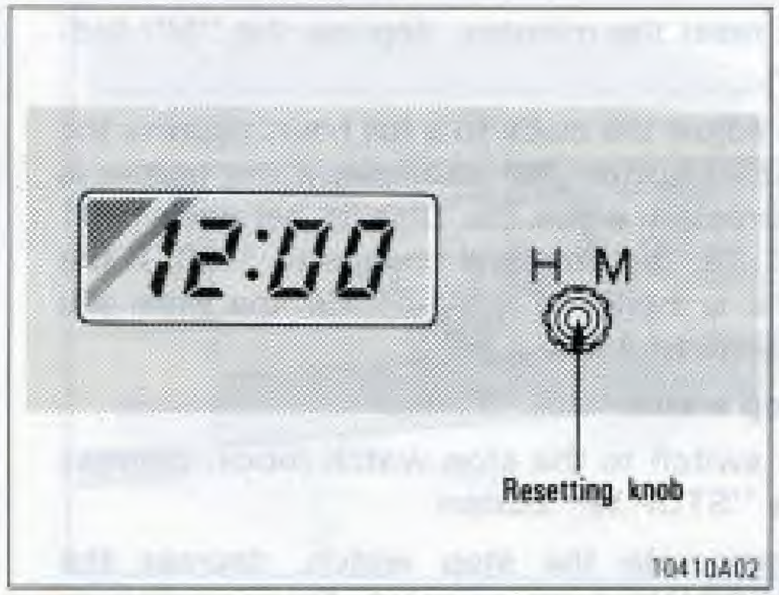

The digital clock indicates the time with the ignition key at the "ACC" or "ON" position. To reset the hour, depress and turn the resetting knob counterclockwise. To reset the minutes, depress and turn the resetting knob clockwise. To adjust the time to a full hour, pull the resetting knob.

For example, if the resetting knob is pulled when the time is between 1:01—1:29, the time will change to 1:00. If the time is between 1:30—1:59, the time will change to 2:00.

When the instrument panel lights are turned on, the brightness of the time indication will be reduced.

Once the electrical power source has been disconnected from the clock, the time is automatically set to 1:00 (one o'clock).

Clock (multi-function type)

10410102

The multi-function clock indicates the time, operates the stop watch and sets off the alarm.

The display appears when the ignition switch is in the "ACC" or "ON" position. When the instrument panel lights are turned on, the brightness of the display will be reduced.

Clock

The time is displayed as power flows to the display.

To reset the hour, depress the "H" button. The blinking "A" or "P" on the display means A.M. or P.M. respectively.

To reset the minutes, depress the "M" button.

To adjust the clock to a full hour, depress the "SET" button. For example, if the button is depressed when the time is between 1:01 —1:29, the time will change to 1:00. If the time is between 1:30—1:59, the time will change to 2:00.

Stop watch

To switch to the stop watch mode, depress the "STOP.W" button.

To operate the stop watch, depress the "STOP.W" button repeatedly according to the instructions below:

1st	starts timing
2nd	stops
3rd	resets to zero
4th	returns to clock

After the display reaches "19:59.9", it will begin from zero.

Alarm

To switch to the alarm mode, depress the "ALM" button.

To set the alarm, adjust the display to the desired time by the same procedure as described in the clock mode. Then depress the "SET" button. The point next to the minute display tells that the alarm is set. After 6 seconds, the display will automatically return to the clock mode.

The alarm will sound for 1 minute even when the ignition is turned off. To stop the alarm, depress any button.

If the alarm setting is not started within 6 seconds after switching to the alarm mode, the display automatically returns to the clock mode.

To change the alarm setting, readjust the display. Depressing the "SET" button is not necessary.

To cancel the alarm setting, depress the "SET" button. Make sure that the point next to the minute display has disappeared.

Once the electrical power source has been disconnected, the clock memory is cancelled. When electrical power is restarted, the time is automatically set to one o'clock A.M.

Cigarette lighter and ashtray

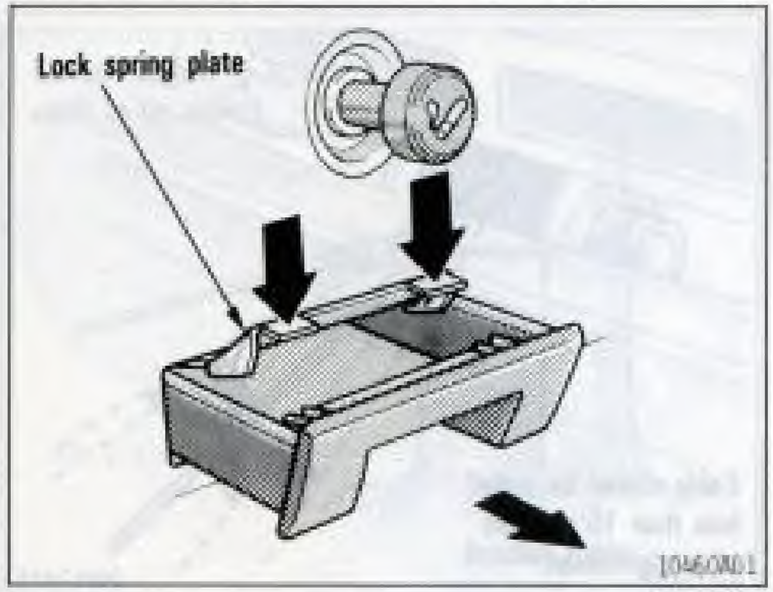

To operate the cigarette lighter, press it in. When it becomes heated, it automatically pops out ready for use.

If the engine is not running, the key must be in the "ACC" position.

Do not hold the cigarette lighter pressed in.

When finished with your cigarette, thoroughly extinguish it in the ashtray to prevent other cigarette butts from catching fire. After using the ashtray, push it back in completely.

To remove the ashtray, press down on the lock spring plate and pull out.

Use a Toyota genuine cigarette lighter or equivalent for replacement.

Glovebox

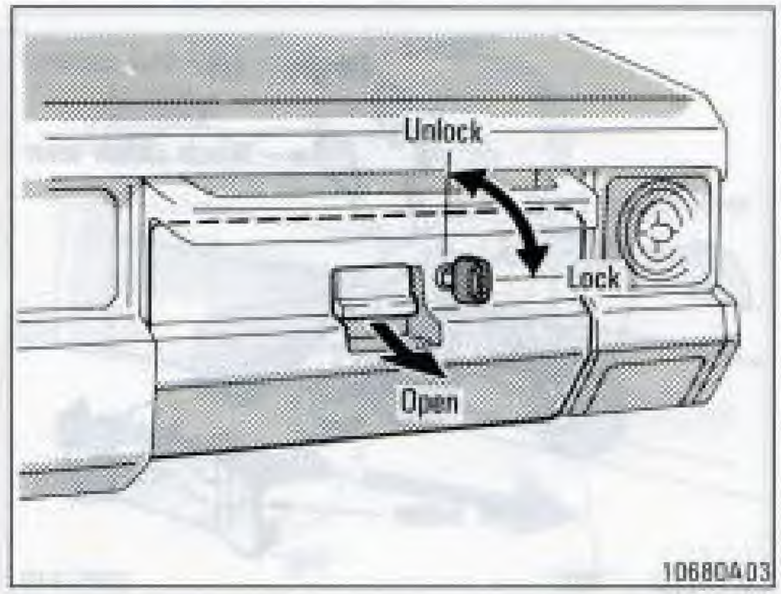

To open the glovebox door, pull the lever. To lock the glovebox door, insert the key and turn it clockwise.

CAUTION:

To reduce the chance of injury in case of an accident or a sudden stop, always keep the glovebox door closed while driving.

Tie-down hooks

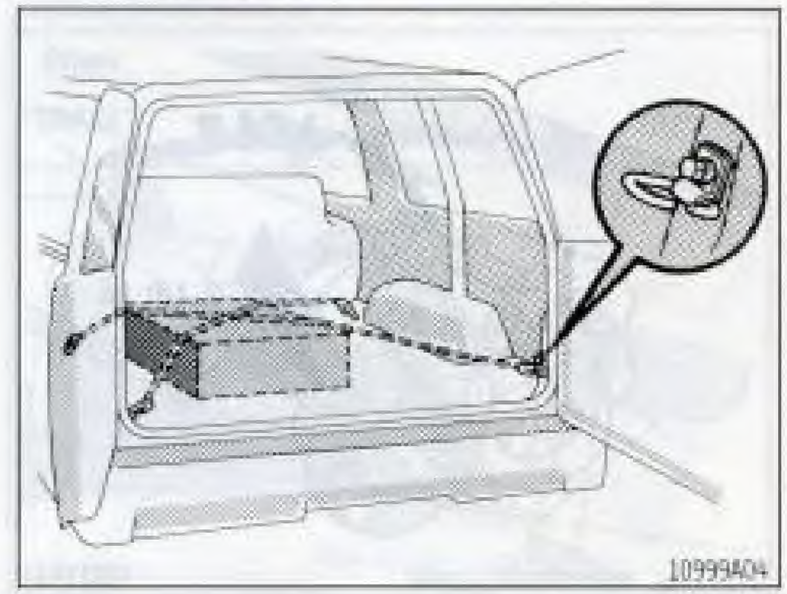

To secure your luggage, use the tie-down hooks as shown above.

See "Luggage stowage precautions" in Part 2 for precautions to observe in loading luggage.

Pintle hook

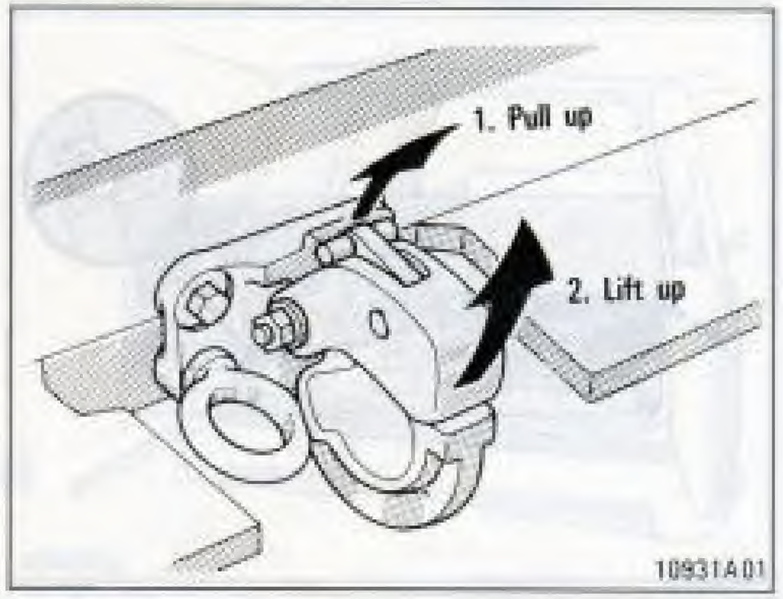

Pull the pintle hook lock lever up and lift the upper half of the hook up. After hooking, let the upper half back down.

The pintle hook can be used for towing.

As a double safety measure, attach the vehicle being towed to the eyelet bolt with a cable or rope.

Attach the vehicle being pulled to the pintle hook so that the pulling force is horizontal.

Mechanical winch

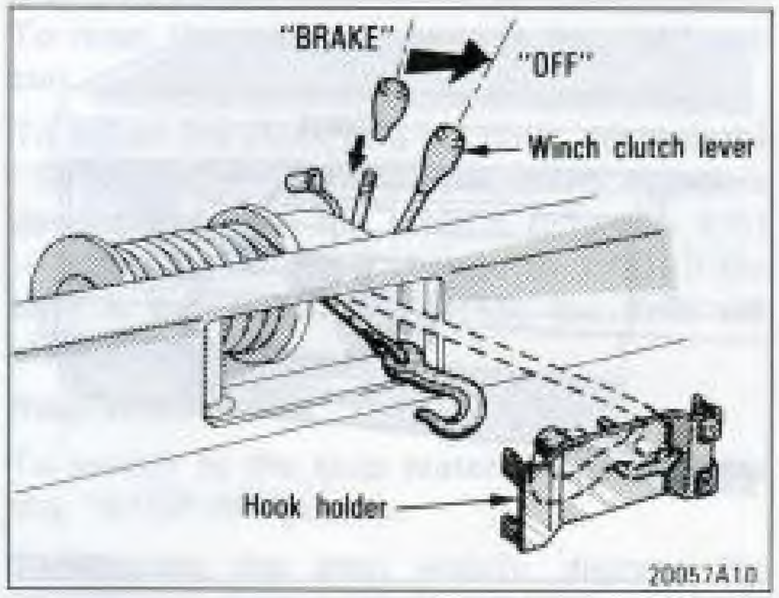

ATTACHING THE CABLE

1. Park the vehicle straight ahead of the object to pull.

2. Remove the cap from the winch clutch lever, install the lever head attached on the winch cover (vehicles with 22R engine) and move the lever from "BRAKE" to the "OFF" position.

3. Remove the hook holder and pull out the cable by hand.

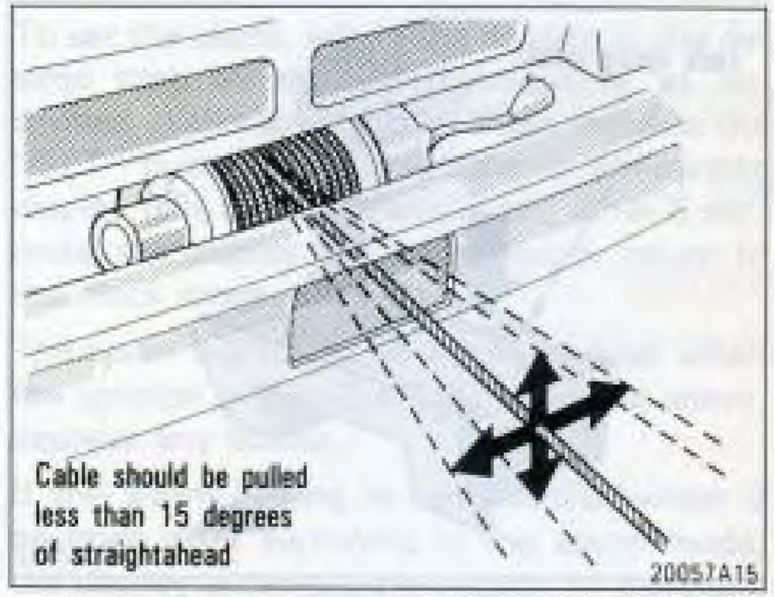

NOTICE:

Do not use the winch to pull a load heavier than 2000 kg (4400 lb.).

Keep the cable straight ahead, in line with the vehicle. Do not pull anything with the cable slanted more than 15 degrees to either side.

Never use the hook to attach the winch cable directly to an object. First pass another cable around the object and then attach the hook.

Do not pull out all of the cable – leave at least 5 turns on the winch drum.

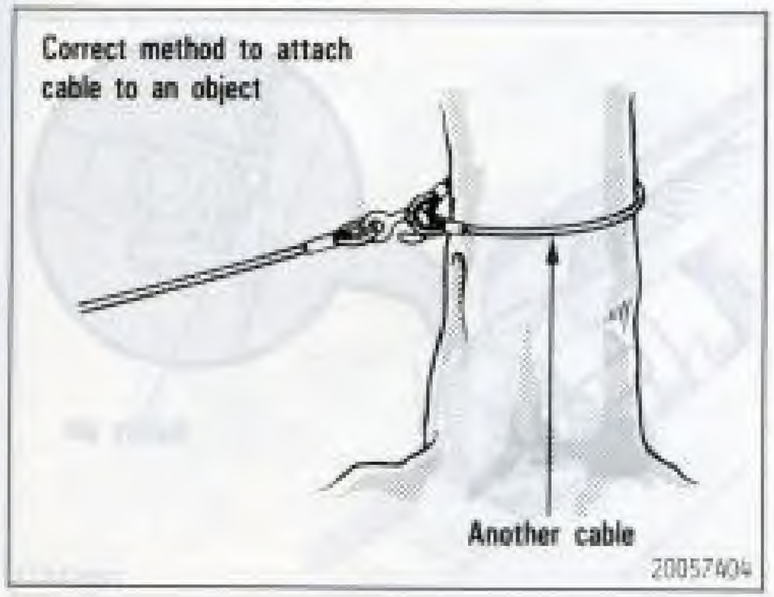

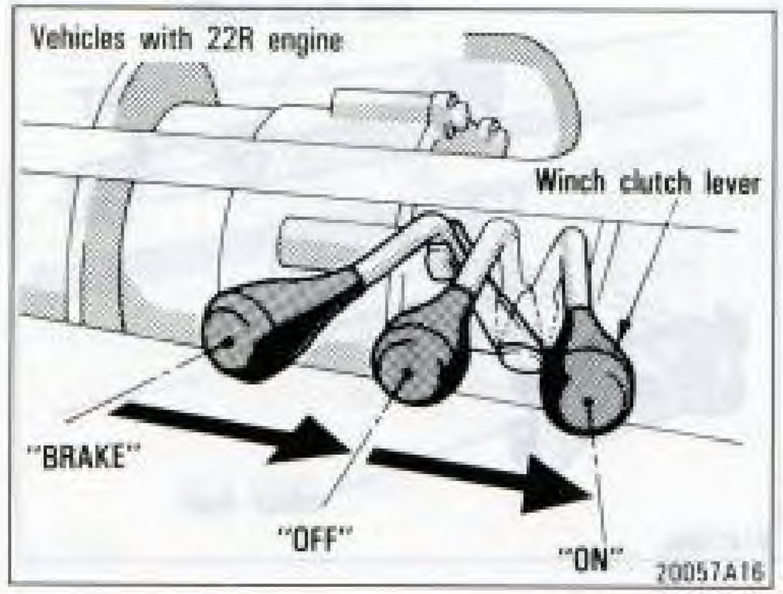

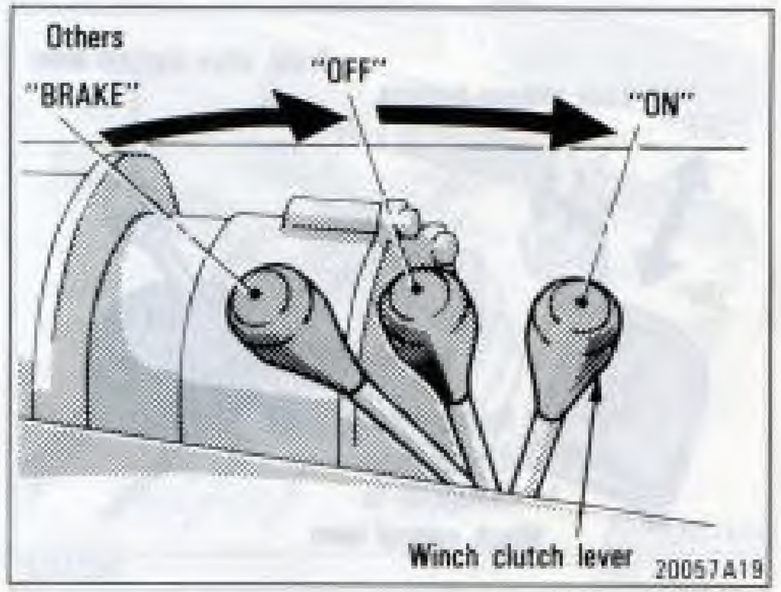

OPERATING THE WINCH

1. Move the winch clutch lever to the "ON" position.

2. Shift the front drive control lever into neutral.

3. Press in the lock release buttons on the winch control lever (side button first and top button next).

4. Move the winch control lever to the "ON" position.

5. Start the engine and operate the winch as follows.

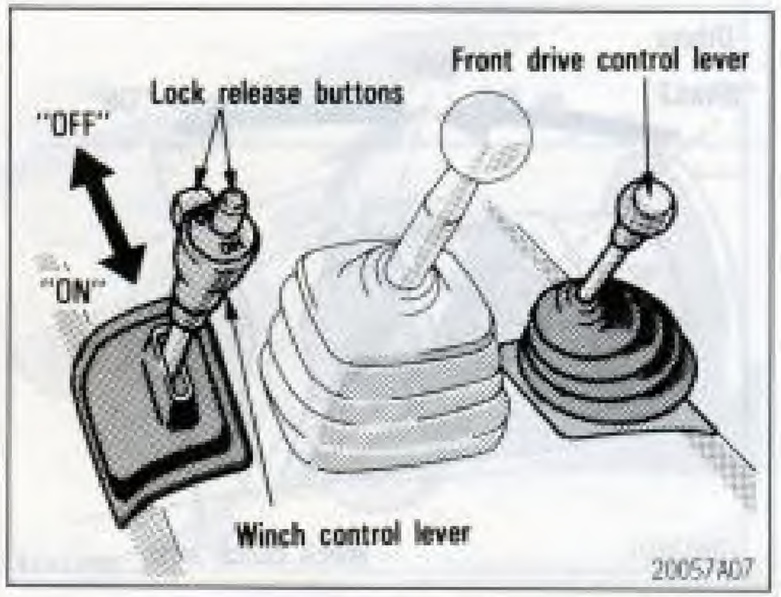

Depress the clutch pedal and shift the transmission into the top gear for winding and the reverse for unwinding. Then release the clutch pedal slowly and control the winch speed with the accelerator pedal.

To stop the winch momentarily, shift the transmission into neutral.

NOTICE:

Do not release the clutch rapidly. It could overload the winch.

Do not slip the clutch too much, or it will overheat.

Always take out all slack in the cable before applying full power to the winch.

Do not wind the cable by hand. Using the engine, wind the cable with some tension on it. If the cable is loosely wound, it could be crushed and damaged when a load is applied.

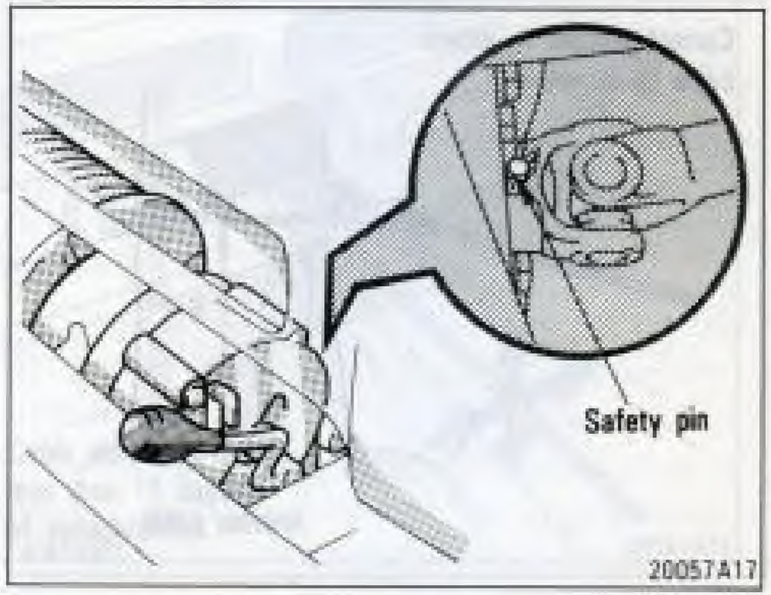

The winch has a safety pin which is designed to shear if the winch is overloaded.

If the pin should shear, replace it only with a genuine Toyota part (part number 90240-05004). Do not use a substitute. It is a good idea to carry an extra shear pin with you —especially for back-country use.

Electric winch

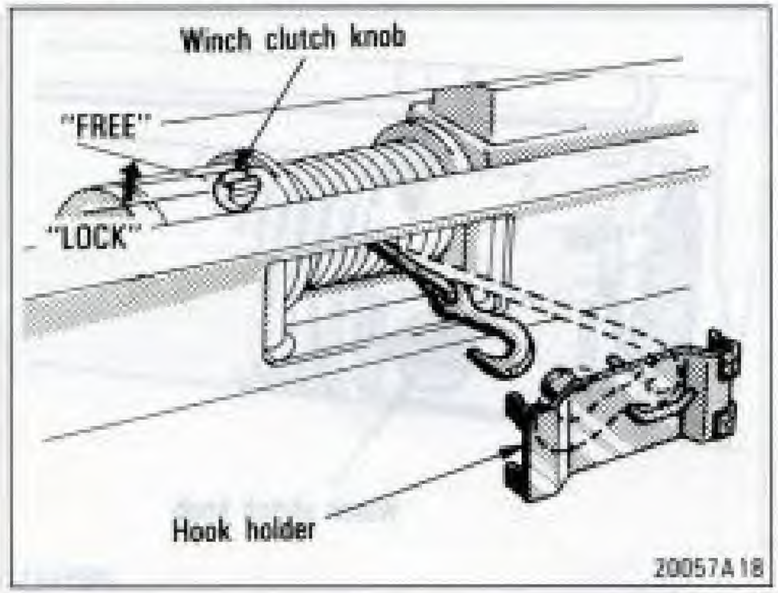

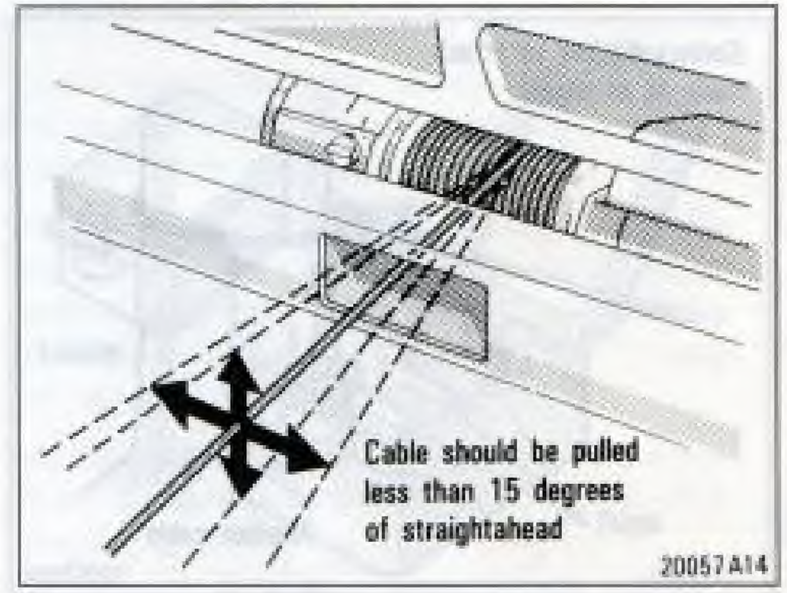

AFTER USING THE WINCH

1. Wind up the cable being careful not to catch your hand into the cable inlet.

2. Move the winch clutch lever to the "BRAKE" position.

3. Remove the lever head from the winch clutch lever and put the cap on the lever (vehicles with 22R engine).

4. Secure the hook in place with the hook holder.

5. Place the winch control lever in the "OFF" position.

ATTACHING THE CABLE

1. Park the vehicle straight ahead of the object to pull.

2. Move the winch clutch knob from "LOCK" to the "FREE" position.

3. Remove the hook holder and pull out the cable by hand.

NOTICE:

Do not use the winch to pull a load heavier than 1000 kg (2200 lb.).

Keep the cable straight ahead, in line with the vehicle. Do not pull anything with the cable slanted more than 15 degrees to either side.

Never use the hook to attach the winch cable directly to an object. First pass another cable around the object and then attach the hook.

Do not pull out all of the cable—leave at least 5 turns on the winch drum.

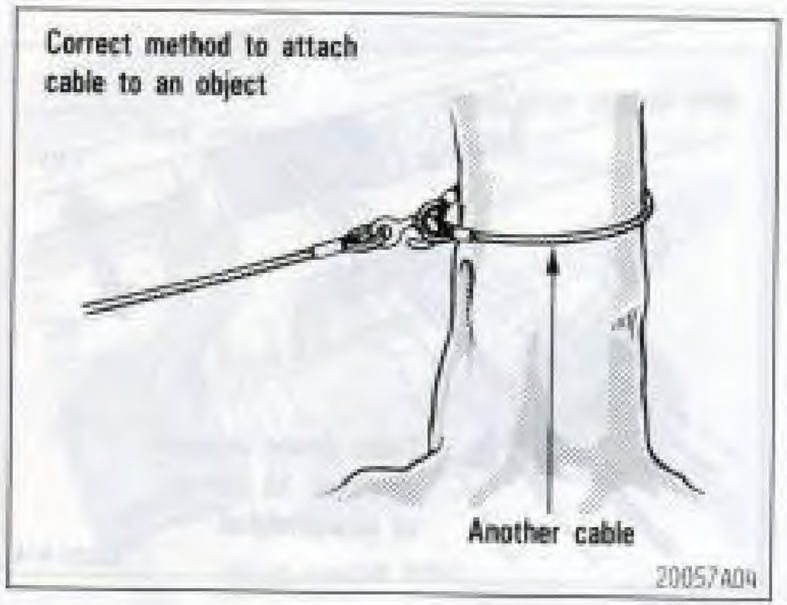

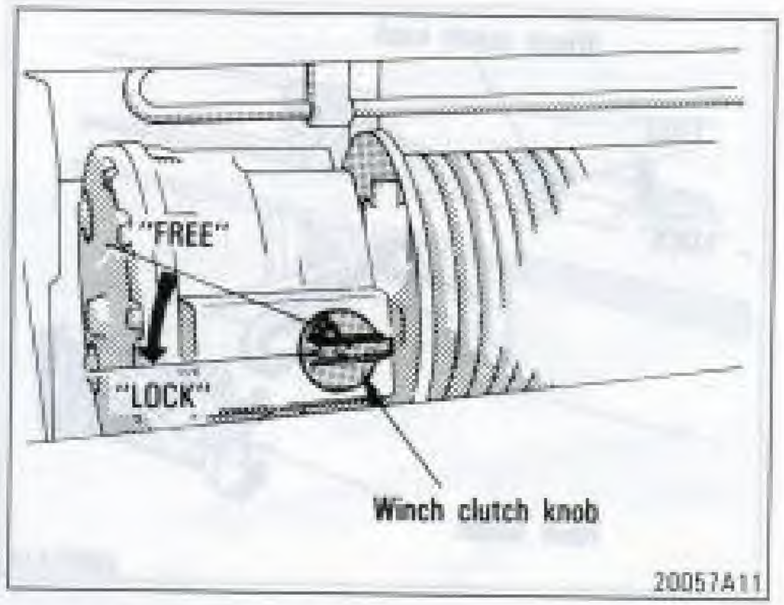

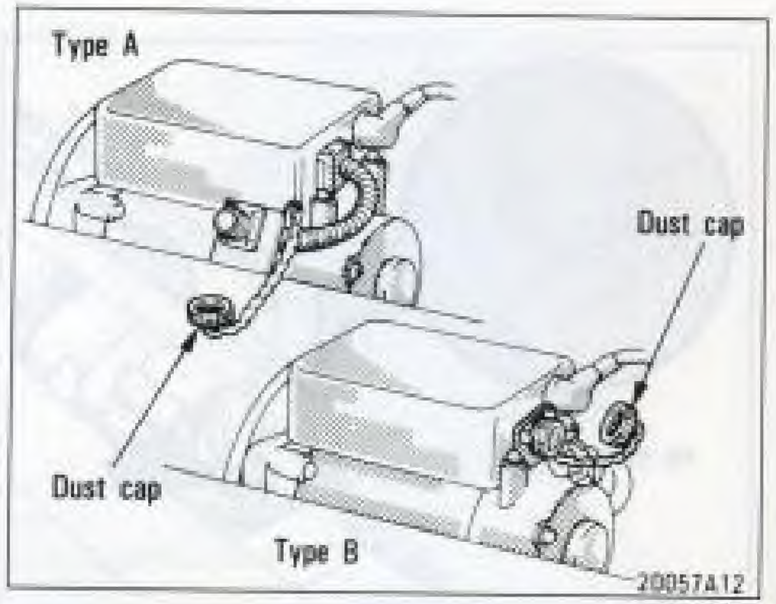

OPERATING THE WINCH

1. Move the winch clutch knob to the "LOCK" position.

2. Remove the dust cap of the terminal on the winch motor and connect the remote control wire plug to the terminal.

3. Shift the transmission into neutral.

4. Start the engine and run it at about 1200 rpm.

5. Confirm that the power source indicator light comes on. Then pull the remote control switch to the "IN" position (wind) or push it to the "OUT" position (unwind). The winch will stop automatically when you release your hand from the remote control switch.

If the power source indicator light dims noticeably, stop operation and allow the battery to recharge.

When pulling heavy loads, the motor overheating warning light may come on and the warning buzzer sound. If this happens, stop operation and allow the winch motor to cool.

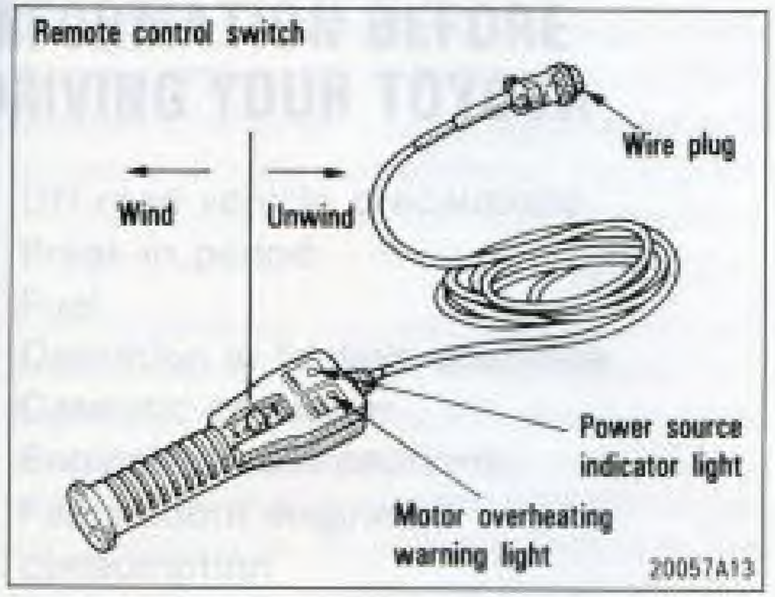

NOTICE:

Be careful not to drop the remote control or hit it against an object.

Avoid prolonged use of the winch. Prolonged use will cause the battery to discharge.

Do not wind the cable by hand. Using the winch motor, wind the cable with some tension on it. If the cable is loosely wound, it could be crushed and damaged when a load is applied.

AFTER USING THE WINCH

1. Wind up the cable being careful not to catch your hand into the cable inlet.

2. Disconnect the remote control wire plug from the terminal and install the dust cap to the terminal.

3. Move the winch clutch knob to the "LOCK" position.

4. Secure the hook in place with the hook holder.

Power outlet box

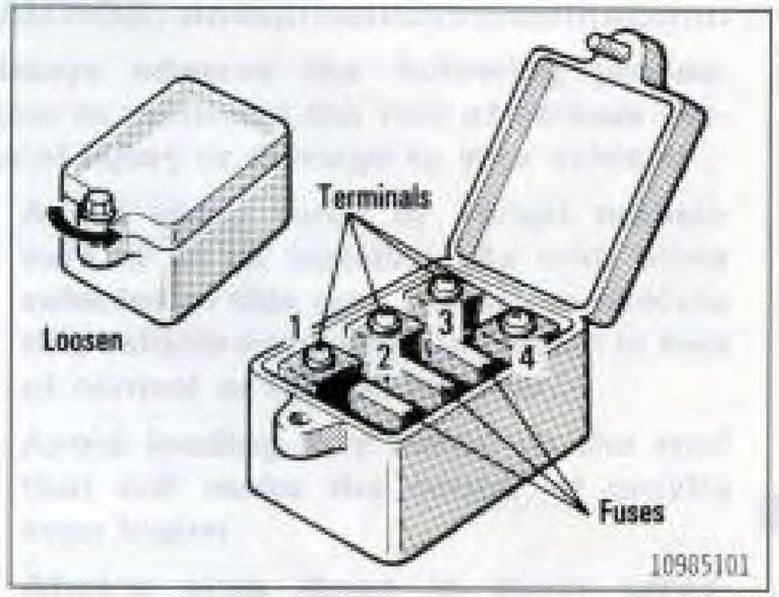

The power outlet box is designed to supply power to additional electrical components.

It is installed in the engine compartment.

Terminals

1 — Power regardless of the ignition switch position.
(20 A or 10 A* fuse used)

2 — Power when the ignition switch is in the "ON" position.
(10 A or 7.5 A* fuse used)

3 — Power when the ignition switch is in the "ACC" position.
(10 A or 7.5 A* fuse used)

4 — For body ground

*: Vehicles with 24-V system

NOTICE:

Never use a fuse with a higher amperage rating nor some other object in place of a fuse.

When using power from the power outlet box, avoid the use of other electrical components to prevent battery discharge.

Part 2
INFORMATION BEFORE DRIVING YOUR TOYOTA

- Off-road vehicle precautions
- Break-in period
- Fuel
- Operation in foreign countries
- Catalytic converter
- Engine exhaust cautions
- Facts about engine oil consumption
- Brake system
- Luggage stowage precautions
- Rear step bumper
- Limited-slip differential
- Your Toyota's identification

Off-road vehicle precautions

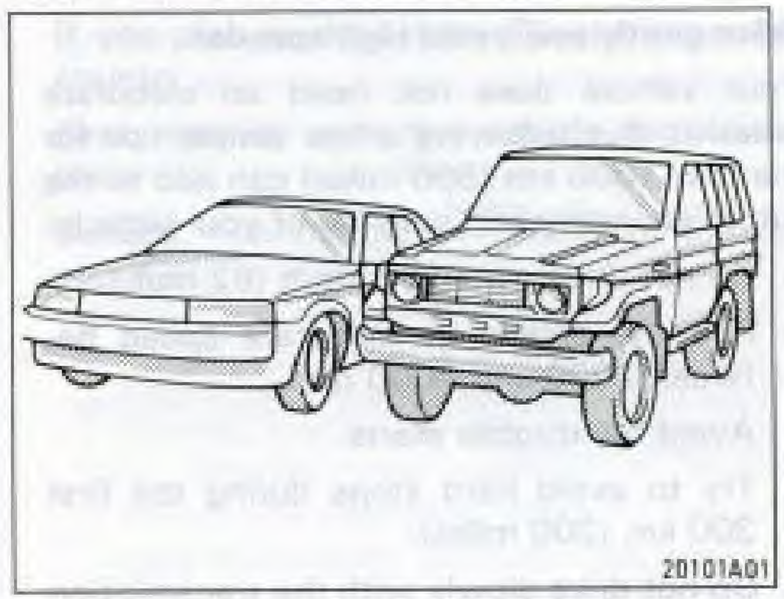

This vehicle is one of the class of vehicles which have higher ground clearance and narrower tread in relation to the height of their center of gravity to make them capable of performing in a wide variety of off-road applications. Specific design characteristics give it a higher center of gravity than ordinary cars. An advantage of the higher ground clearance is a better view of the road allowing you to anticipate problems. It is not designed for cornering at the same speeds as conventional two-wheel drive vehicles any more than low-slung sports cars are designed to perform satisfactorily under off-road conditions.

CAUTION:

Always observe the following precautions to minimize the risk of serious personal injury or damage to your vehicle:

- **Avoid sharp turns or abrupt maneuvers, if at all possible. As with other vehicles of this type, failure to operate this vehicle correctly may result in loss of control or vehicle rollover.**
- **Avoid loading any items on the roof that will make the center of gravity even higher.**
- **Always slow down in gusty crosswinds. Because of its high center of gravity, your vehicle is more sensitive to side winds than an ordinary passenger car. Slowing down will allow you to have much better control.**
- **Do not drive horizontally across steep slopes. Driving straight up or straight down is preferred. Your vehicle (or any similar off-road vehicle) can tip over sideways much more easily than forward or backward.**

- **When driving off-road or in rugged terrain, do not drive at excessive speeds, jump, strike objects, etc. This may cause loss of control or vehicle rollover. You are also risking expensive damage to your vehicle's suspension and chassis.**

Break-in period

Drive gently and avoid high speeds.

Your vehicle does not need an elaborate break-in. But following a few simple tips for the first 1000 km (600 miles) can add to the future economy and long life of your vehicle:

- Do not drive over 100 km/h (62 mph).
- Run the engine at moderate speed between 2000 and 4000 rpm.
- Avoid full-throttle starts.
- Try to avoid hard stops during the first 300 km (200 miles).
- Do not drive slowly with the transmission in a high gear.
- Do not drive for a long time at any single speed, either fast or slow.
- Do not tow a trailer during the first 800 km (500 miles).

For the first 500 km (300 miles):

We recommend that you use high range, two-wheel drive, with both free-wheeling hubs engaged. For information on the four-wheel drive system and the front hubs, see "Four-wheel drive system" in Chapter 1-6.

Fuel

Selecting the proper fuel is essential to satisfactory performance of the engine.

Engine damage caused by use of improper fuels is not covered under Toyota's new vehicle warranty.

FUEL TYPE

Gasoline engine—Use only unleaded gasoline for vehicles sold in Germany or with a catalytic converter. On vehicles with 22R engine sold outside Germany, using unleaded gasoline is recommended. But if it is impossible to get unleaded gasoline by any means, you may use leaded gasoline.

Diesel engine—Use only diesel fuel.

To help prevent gas station mixups, vehicles designed for use with unleaded gasoline have a new smaller fuel tank opening. The special nozzle on pumps with unleaded fuel will fit it, but the larger standard nozzle on pumps with leaded gas will not.

NOTICE:

Do not use leaded gasoline on vehicles sold in Germany or with a catalytic converter. Use of leaded gasoline will cause the catalytic converter to lose its effectiveness and the emission control system to function improperly. Also, this can increase maintenance costs.

OCTANE/CETANE NUMBER

Gasoline engine—
Select the following octane number or higher (Research Octane Number).

22R engine	90
22R-E engine	91

Diesel engine—
Select cetane number 48 or higher.

Use of fuel with an octane or cetane number lower than stated will cause persistent heavy knocking. If severe, this will lead to engine damage.

If your engine knocks...

If you detect heavy knocking even when using the recommended fuel, or if you hear steady knocking while holding a steady speed on level roads, consult your Toyota dealer.

However, now and then, you may notice light knocking for a short time while accelerating or driving up hills. This is no cause for concern.

FUEL TANK CAPACITY

90 L (23.8 gal., 19.8 Imp. gal.)

Operation in foreign countries

If you plan to drive your Toyota in another country ...

First, comply with the vehicle registration laws.

Second, confirm the availability of the correct fuel.

Catalytic converter (22R-E engine)

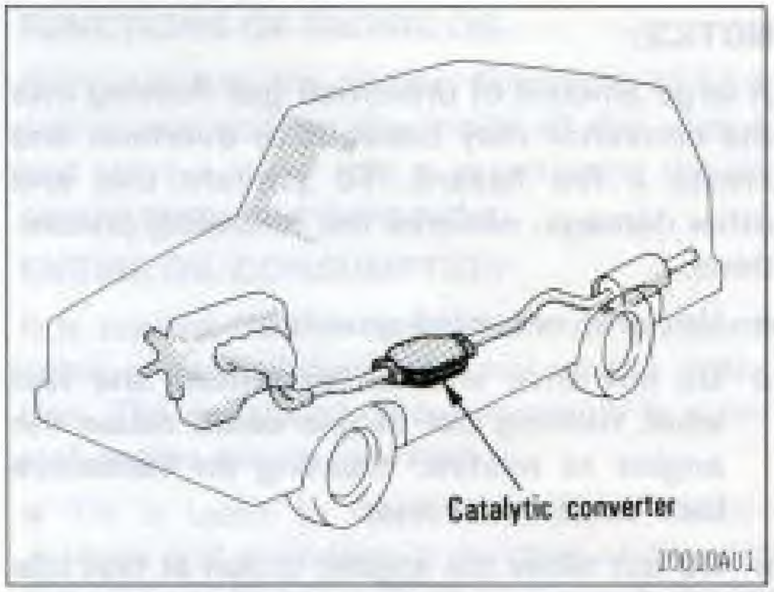

The catalytic converter is an emission control device installed in the exhaust system.

It looks somewhat like a muffler, but its purpose is to reduce pollutants in the exhaust gas.

CAUTION:

- **Keep people and combustible materials away from the exhaust pipe while the engine is running. The exhaust gas is very hot.**
- **Do not idle or park your vehicle over anything that might burn easily such as grass, leaves, paper or rags.**

NOTICE:

A large amount of unburned gas flowing into the converter may cause it to overheat and create a fire hazard. To prevent this and other damage, observe the following precautions:

- **Use only unleaded gasoline.**
- **Do not drive with an extremely low fuel level; running out of gas could cause the engine to misfire, creating an excessive load on the converter.**
- **Do not allow the engine to run at fast idle speed for more than 10 minutes or at normal idle speed for more than 20 minutes.**
- **Avoid racing the engine.**
- **Do not push-start or pull-start your vehicle.**
- **Do not turn off the ignition while the vehicle is moving.**
- **Keep your engine in good running order. Malfunctions in the engine electrical, ignition or fuel systems could cause an extremely high converter temperature.**
- **If the engine becomes difficult to start or stalls frequently, take your vehicle in for a check-up as soon as possible. Remember, your Toyota dealer knows your vehicle and its catalytic converter system best.**
- **To insure that the converter and the entire emission control system operate properly, your vehicle must receive the periodic inspections required by the Toyota Maintenance Schedule.**

Engine exhaust cautions

CAUTION:

- **Avoid inhaling the engine exhaust. It contains carbon monoxide, which is a colorless and odorless gas. It can cause unconsciousness or even death.**
- **Make sure the exhaust system has no holes or loose connections. The system should be checked from time to time. If you hit something, or notice a change in the sound of the exhaust, have the system checked immediately.**
- **Do not run the engine in a garage or enclosed area except for the time needed to drive the vehicle in or out. The exhaust gases cannot escape, making this a particularly dangerous situation.**
- **Do not remain for a long time in a parked vehicle with the engine running. If it is unavoidable, however, do so only in an unconfined area and adjust the heating or cooling system to force outside air into the vehicle.**
- **To allow proper operation of your vehicle's ventilation system, keep the inlet grilles in front of the windshield clear of snow, leaves, or other obstructions.**

- **EXCEPT PICK-UP: Keep the trunk lid, back hatch or back door closed while driving. An open or unsealed trunk lid, back hatch or back door may cause exhaust gases to be drawn into the vehicle. If you must drive with the trunk lid, back hatch or back door open to accommodate a large object, close the windows, open all the dashboard vents and have the heating or cooling system deliver fresh air into the vehicle by turning the fan to high speed with the air intake control set at the "FRESH" or OUTSIDE AIR position.**

  If you smell exhaust fumes in the vehicle, drive with the windows open and the trunk lid, back hatch or back door closed. Have the cause immediately located and corrected.
- **PICK-UP: If you smell exhaust fumes in the vehicle, drive with the side windows open. Have the cause immediately located and corrected.**

Toyota does not recommend occupying the rear cargo area when it is fitted with a slide-in camper, camper shell or other type cover while the engine is running. This caution applies to both driving and stopped or parked situations with the engine running. Particular care should be taken to prevent exhaust gases from entering camper bodies, trailers or other enclosures on or around your vehicle. If exhaust fumes are detected, open all windows and thoroughly ventilate the area.

Facts about engine oil consumption

FUNCTIONS OF ENGINE OIL

Engine oil has the primary functions of lubricating and cooling the inside of the engine, and plays a major role in maintaining the engine in proper working order.

ENGINE OIL CONSUMPTION

It is normal that an engine should consume some engine oil during normal engine operation. The causes of oil consumption in a normal engine are as follows.

- Oil is used to lubricate pistons, piston rings and cylinders. A thin film of oil is left on the cylinder wall when a piston moves downwards in the cylinder. High negative pressure generated when the vehicle is decelerating sucks some of this oil into the combustion chamber. This oil as well as some part of the oil film left on the cylinder wall is burned by the high temperature combustion gases during the combustion process.
- Oil is also used to lubricate the stems of the intake valves. Some of this oil is sucked into the combustion chamber together with the intake air and is burned along with the fuel. High temperature exhaust gases also burn the oil used to lubricate the exhaust valve stems.

The amount of engine oil consumed depends on the viscosity of the oil, the quality of the oil and the conditions the vehicle is driven under.

More oil is consumed under such driven conditions as high speeds and frequent acceleration and deceleration.

A new engine consumes more oil, since its pistons, piston rings and cylinder walls have not become conditioned.

When judging the amount of oil consumption, note the oil may become diluted and make it difficult to judge the true level accurately.

As an example, if a vehicle is used for repeated short trips, and consumes a normal amount of oil, the dipstick may not show any drop in the oil level at all, even after 1000 km (600 miles) or more. This is because the oil is gradually becoming diluted with fuel or moisture, making it appear that the oil level has not changed.

The diluting ingredients evaporate out when the vehicle is then driven at high speeds, as on an expressway, making it appear that oil is excessively consumed after driving at high speeds.

IMPORTANCE OF ENGINE OIL LEVEL CHECK

One of the most important points in proper vehicle maintenance is to keep the engine oil at the optimum level so that oil function will not be impaired. Therefore, it is essential that the oil level be checked regularly. Toyota recommends that the oil level be checked every time you refuel the vehicle.

NOTICE:

Failure to check the oil level regularly could lead to serious engine troubles due to insufficient oil.

For detailed information on oil level check, see "Checking the engine oil level" in Chapter 7-2.

Brake system

Tandem master cylinder brake system

The tandem master cylinder brake system is a hydraulic system with two separate subsystems. If either sub-system should fail, the other will still work. However, the pedal will be harder to press, and your stopping distance will be longer. Also, the brake system warning light may come on.

CAUTION:

Do not rely on a single brake system. Have your brakes fixed immediately.

Brake booster

The brake booster uses engine vacuum to power-assist the brakes. If the engine should quit while you are driving or if the engine drive belt is broken (2L-T engine only), you can bring the vehicle to a stop with normal pedal pressure. There is enough reserve vacuum for one or two stops—but no more!

CAUTION:

- **Do not pump the brake pedal if the engine stalls. Each push on the pedal uses up your vacuum reserve.**
- **Even if the power assist is completely lost, the brakes will still work. But you will have to push the pedal hard —much harder than normal. And your braking distance will be longer.**

Luggage stowage precautions

When stowing luggage or cargo in the vehicle, observe the following:

- Put luggage or cargo in the luggage compartment or rear deck when at all possible. Be sure all items are secured in place.
- Be careful to keep the vehicle balanced. Locating the weight as far forward as possible helps maintain this.
- For better fuel economy, do not carry unneeded weight.

CAUTION:

- **To prevent luggage or packages from sliding forward during braking, do not stack anything in the luggage compartment higher than the seatbacks.**
- **Do not place anything on the flattened seat or it may slide forward during braking.**
- **Never allow anyone to ride in the luggage compartment or rear deck area other than on the seats. It is not designed for passengers. They could be injured in sudden braking.**

Rear step bumper

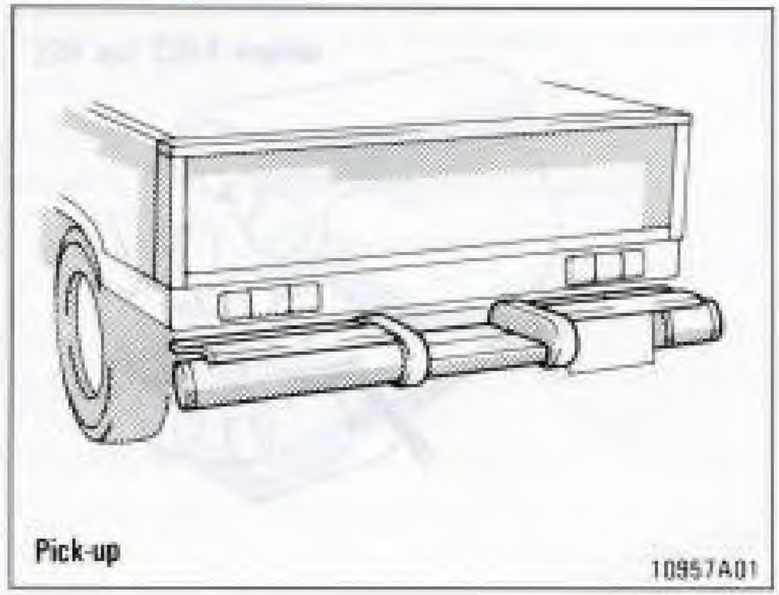
Pick-up
10957A01

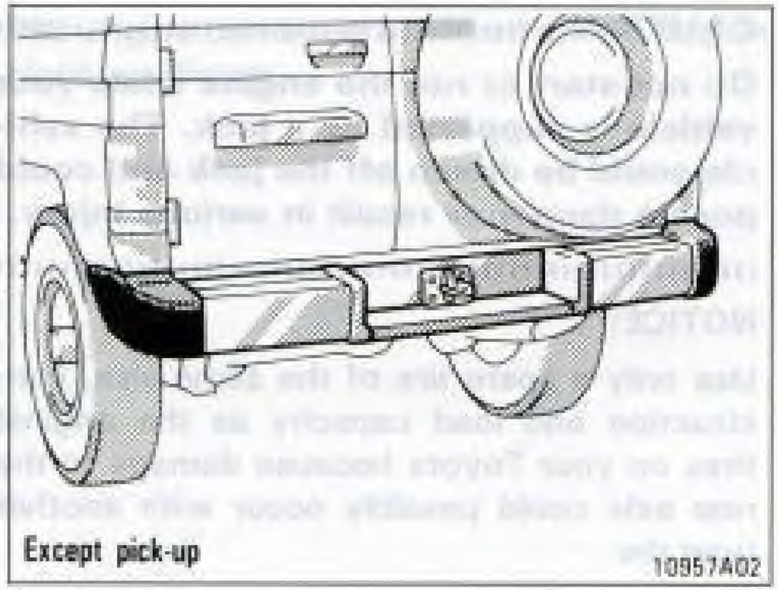
Except pick-up
10957A02

The rear step bumper is for rear end protection and easier step-up loading.

CAUTION:

- **Do not allow more than one person to get on the rear step bumper at a time. It is designed for only one person.**
- **Never drive the vehicle with anyone on the rear step bumper.**

Limited-slip differential

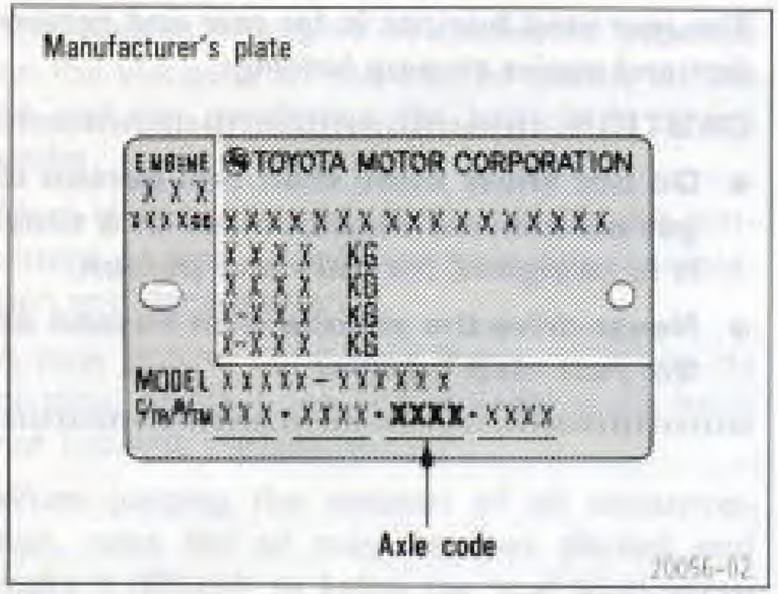

Some Toyotas are equipped with a limited-slip differential. If one rear wheel begins to spin on a slippery surface, the limited-slip differential is designed to aid traction by automatically transmitting driving force to the other wheel. If your vehicle is equipped with a limited-slip differential, the differential gear housing has a label with the letters "LSD". In event the label is torn off or illegible, you can ask your Toyota dealer, or check the manufacturer's plate in the engine compartment. If the last digit of the axle code is a "3" or "5", your vehicle has a limited-slip differential. (See "Your Toyota's identification" for a manufacturer's plate location.)

CAUTION:

Do not start or run the engine while your vehicle is supported by a jack. The vehicle could be driven off the jack and could pose a danger or result in serious injury.

NOTICE:

Use only a spare tire of the same size, construction and load capacity as the original tires on your Toyota because damage to the rear axle could possibly occur with another type tire.

Your Toyota's identification

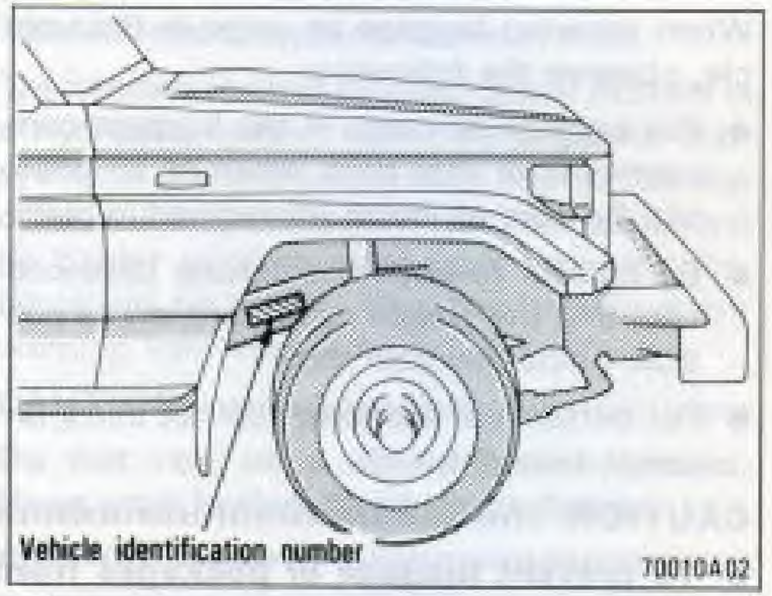

The vehicle identification number (VIN) is the legal identifier for your vehicle.

The vehicle identification number (VIN) is also on the manufacturer's plate.

This is the primary identification number for your Toyota. It is used in registering the ownership of your vehicle.

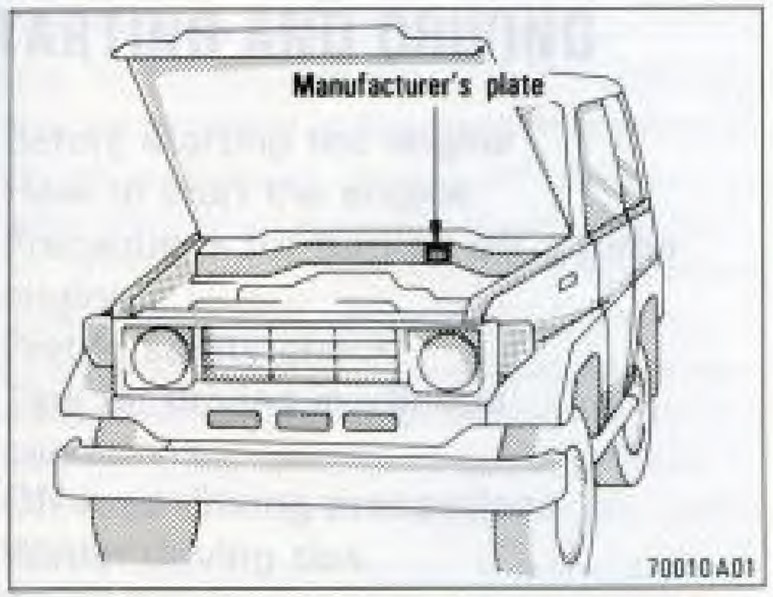

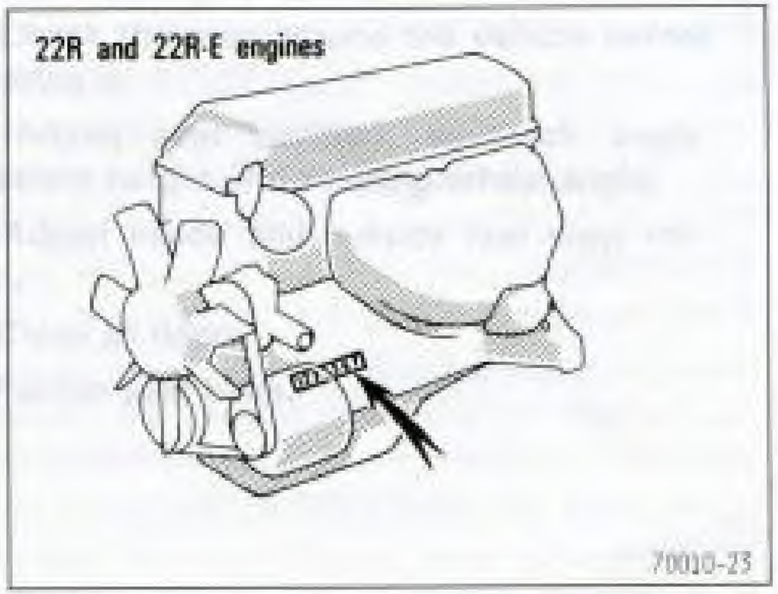

The engine number is stamped on the engine block as shown.

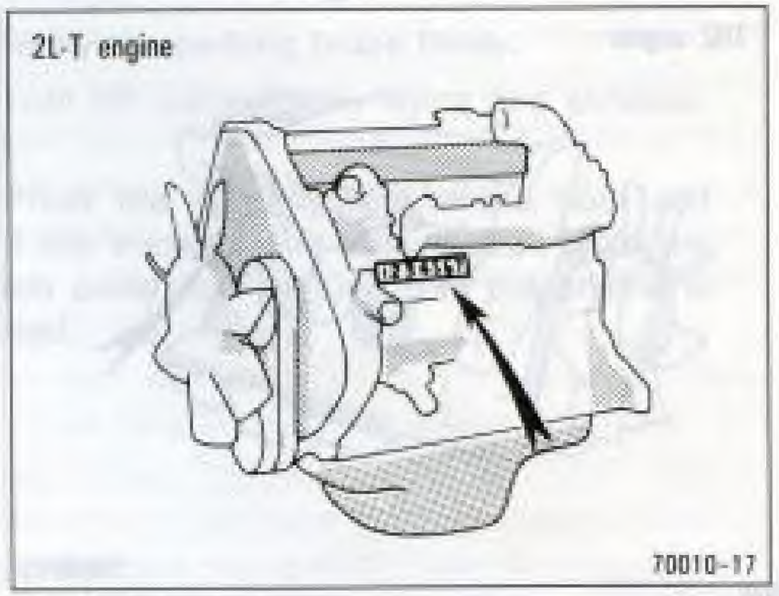

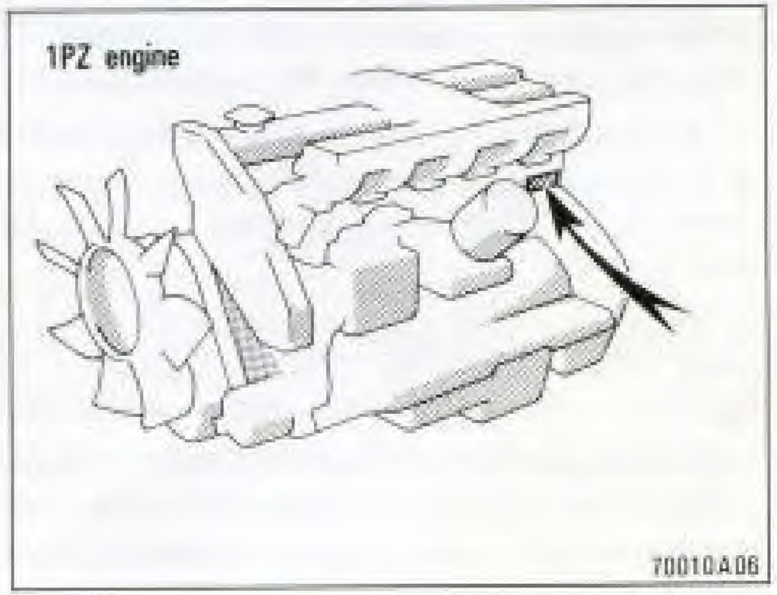

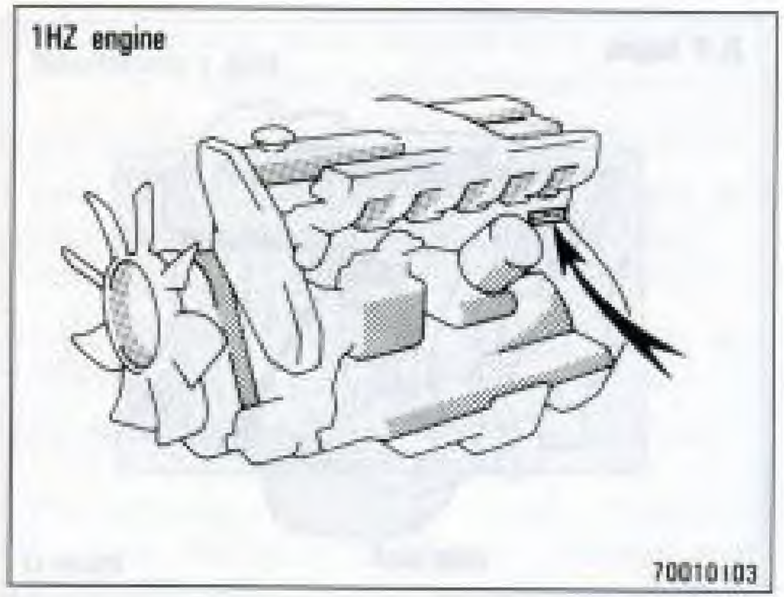
1HZ engine
70010103

Part 3
STARTING AND DRIVING

- Before starting the engine
- How to start the engine
- Precautions for turning off a turbo engine
- Pretrip safety check
- Tips for driving in various conditions
- Off-road driving precautions
- Winter driving tips
- Trailer towing
- How to save fuel and make your vehicle last longer, too

Before starting the engine

1. Check the area around the vehicle before entering it.
2. Adjust seat position, seatback angle, headrest height and steering wheel angle.
3. Adjust inside and outside rear view mirrors.
4. Close all doors.
5. Fasten seat belts.

How to start the engine—
(a) Before cranking

1. Apply the parking brake firmly.
2. Turn off unnecessary lights and accessories.
3. Press the clutch pedal to the floor and shift the transmission into neutral. Hold the clutch pedal to the floor until the engine is started.

(b) Starting the engine (22R engine — for owners in Germany)

Before starting the engine, be sure to follow the instructions in "(a) Before cranking".

Normal starting procedure (engine cold)

1. Press the accelerator pedal once to the floor and release it. This engages the automatic choke and fast idle.

2. With your foot off the accelerator pedal, crank the engine by turning the key to "START". Release it when the engine starts.

Engine should be warmed up by driving, not in idle. For warming up drive with smoothly turning engine until engine temperature is within normal range.

If the weather is below freezing or if the vehicle has not been driven for several days...

1. Before cranking the engine, fully depress and release the accelerator pedal two or three times. This gives a richer mixture for cold starting.

2. With your foot off the accelerator pedal, crank the engine by turning the key to "START". Release it when the engine starts.

Engine should be warmed up by driving, not in idle. For warming up drive with smoothly turning engine until engine temperature is within normal range.

If the engine is warm...

With the accelerator pedal about halfway down, crank the engine by turning the key to "START". Release the key and accelerator pedal when the engine starts. Do not pump the pedal.

If the engine is hot...

With the accelerator pedal fully down to the floor, crank the engine by turning the key to "START". Release the key and accelerator pedal when the engine starts. Do not pump the pedal.

If the engine stalls...

Simply restart it, using the correct procedure given above, depending on the engine temperature.

If the engine will not start—

See "If your vehicle will not start" in Part 4.

NOTICE:

Do not crank for more than 15 seconds at a time. This may overheat the starter and wiring systems.

Do not race a cold engine.

If the engine becomes difficult to start or stalls frequently, have the engine checked immediately.

(b) Starting the engine (22R engine — for owners outside Germany)

Before starting the engine, be sure to follow the instructions in "(a) Before cranking".

Normal starting procedure (engine cold)

1. Press the accelerator pedal once to the floor and release it. This engages the automatic choke and fast idle.

2. With your foot off the accelerator pedal, crank the engine by turning the key to "START". Release it when the engine starts.

3. After the engine runs for about 10 seconds, you are ready to drive.

If the weather is below freezing or if the vehicle has not been driven for several days...

1. Before cranking the engine, fully depress and release the accelerator pedal two or three times. This gives a richer mixture for cold starting.

2. With your foot off the accelerator pedal, crank the engine by turning the key to "START". Release it when the engine starts.

3. After the engine runs for about 30 seconds, tap the accelerator pedal once to reduce the idle speed (rpm).

4. Let the engine warm up for a few minutes before driving.

If the engine is warm...

With the accelerator pedal about halfway down, crank the engine by turning the key to "START". Release the key and accelerator pedal when the engine starts. Do not pump the pedal.

If the engine is hot...

With the accelerator pedal fully down to the floor, crank the engine by turning the key to "START". Release the key and accelerator pedal when the engine starts. Do not pump the pedal.

If the engine stalls...

Simply restart it, using the correct procedure given above, depending on the engine temperature.

If the engine will not start—

See "If your vehicle will not start" in Part 4.

NOTICE:

Do not crank for more than 15 seconds at a time. This may overheat the starter and wiring systems.

Do not race a cold engine.

If the engine becomes difficult to start or stalls frequently, have the engine checked immediately.

(b) Starting the engine (22R-E engine— for owners in Germany)

Before starting the engine, be sure to follow the instructions in "(a) Before cranking".

Normal starting procedure

The electronic fuel injection system in your engine automatically controls the proper air-fuel mixture for starting. You can start a cold or hot engine as follows:

With your foot off the accelerator pedal, crank the engine by turning the key to "START". Release it when the engine starts.

Engine should be warmed up by driving, not in idle. For warming up drive with smoothly turning engine until engine temperature is within normal range.

If the engine stalls...

Simply restart it, using the correct procedure given in normal starting.

If the engine will not start—

See "If your vehicle will not start" in Part 4.

NOTICE:

Do not crank for more than 15 seconds at a time. This may overheat the starter and wiring systems.

Do not race a cold engine.

If the engine becomes difficult to start or stalls frequently, have the engine checked immediately.

(b) Starting the engine (22R-E engine— for owners outside Germany)

Before starting the engine, be sure to follow the instructions in "(a) Before cranking".

Normal starting procedure

The electronic fuel injection system in your engine automatically controls the proper air-fuel mixture for starting. You can start a cold or hot engine as follows:

1. With your foot off the accelerator pedal, crank the engine by turning the key to "START". Release it when the engine starts.

2. After the engine runs for about 10 seconds, you are ready to drive.

If the weather is below freezing, let the engine warm up for a few minutes before driving.

If the engine stalls...

Simply restart it, using the correct procedure given in normal starting.

If the engine will not start—

See "If your vehicle will not start" in Part 4.

NOTICE:

Do not crank for more than 15 seconds at a time. This may overheat the starter and wiring systems.

Do not race a cold engine.

If the engine becomes difficult to start or stalls frequently, have the engine checked immediately.

(b) Starting the engine (2L-T, 1PZ and 1HZ engines— for owners in Germany)

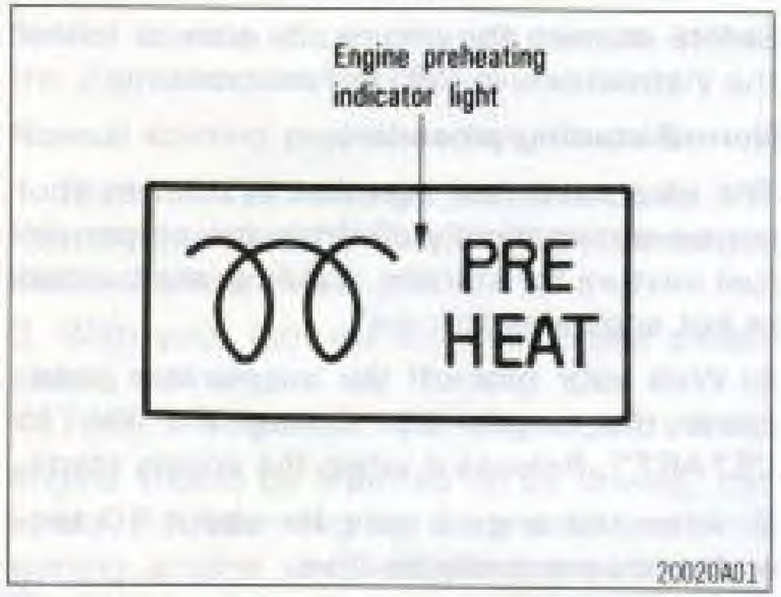

Before starting the engine, be sure to follow the instructions in "(a) Before cranking".

Normal starting procedure (engine cold)

1. Turn the key to "ON" and verify that the engine preheating indicator light has come on. Keep the key in the position until the light goes off.

2. With the accelerator pedal about halfway down, crank the engine by turning the key to "START". Release the key and accelerator pedal when the engine starts.

Engine should be warmed up by driving, not in idle. For warming up drive with smoothly turning engine until engine temperature is within normal range.

If the weather is extremely cold...

1. Turn the key to "ON" and verify that the engine preheating indicator light has come on. Keep the key in the position until the light goes off.

2. With the accelerator pedal fully down to the floor, crank the engine by turning the key to "START". Release the key and accelerator pedal when the engine starts.

Engine should be warmed up by driving, not in idle. For warming up drive with smoothly turning engine until engine temperature is within normal range.

3. After the engine runs, you are ready to drive.

1PZ and 1HZ engines: If the engine runs rough while warming up, adjust the throttle knob to increase engine speed to where the engine runs smoothly. After the engine is fully warmed up, be sure to return the throttle knob to its original position before driving off.

If the engine is warm...

1PZ and 1HZ engines: With the accelerator pedal about halfway down, crank the engine by turning the key to "START". Release the key and accelerator pedal when the engine starts.

If the engine does not start, try the above "Normal starting procedure".

2L-T engine: Follow the above "Normal starting procedure".

If the engine stalls...

Simply restart it, using the correct procedure given above, depending on the engine temperature.

If the engine will not start—

See "If your vehicle will not start" in Part 4.

NOTICE:

Do not crank for more than 30 seconds at a time. This may overheat the starter and wiring systems.

Do not race a cold engine.

If the engine becomes difficult to start or stalls frequently, have the engine checked immediately.

(b) Starting the engine (2L-T, 1PZ and 1HZ engines— for owners outside Germany)

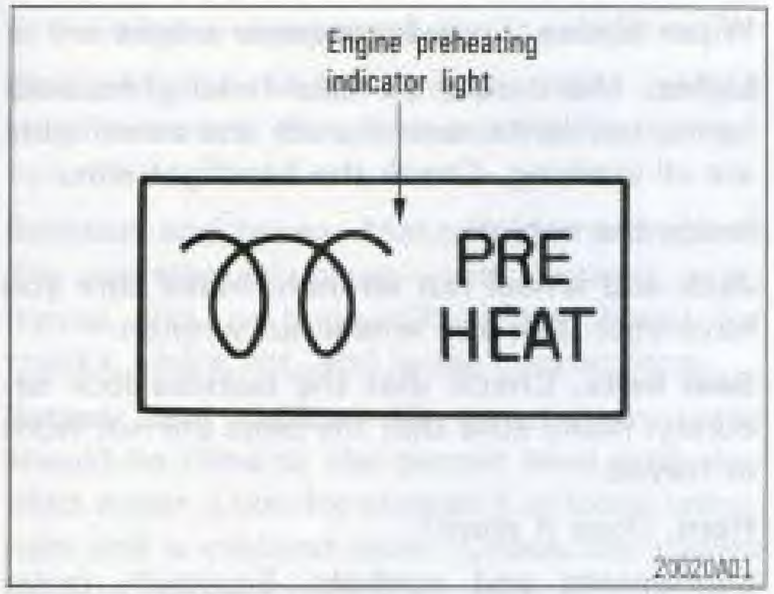

Before starting the engine, be sure to follow the instructions in "(a) Before cranking".

Normal starting procedure (engine cold)

1. Turn the key to "ON" and verify that the engine preheating indicator light has come on. Keep the key in the position until the light goes off.

2. With the accelerator pedal about halfway down, crank the engine by turning the key to "START". Release the key and accelerator pedal when the engine starts.

3. After the engine runs for about 10 seconds, you are ready to drive.

If the weather is below freezing, let it warm up for a few minutes before driving.

If the weather is extremely cold...

1. Turn the key to "ON" and verify that the engine preheating indicator light has come on. Keep the key in the position until the light goes off.

2. With the accelerator pedal fully down to the floor, crank the engine by turning the key to "START". Release the key and accelerator pedal when the engine starts.

3. After the engine warms up for a few minutes, you are ready to drive.

1PZ and 1HZ engines: If the engine runs rough while warming up, adjust the throttle knob to increase engine speed to where the engine runs smoothly. After the engine is fully warmed up, be sure to return the throttle knob to its original position before driving off.

If the engine is warm...

1PZ and 1HZ engines: With the accelerator pedal about halfway down, crank the engine by turning the key to "START". Release the key and accelerator pedal when the engine starts.

If the engine does not start, try the above "Normal starting procedure".

2L-T engine: Follow the above "Normal starting procedure".

If the engine stalls...

Simply restart it, using the correct procedure given above, depending on the engine temperature.

If the engine will not start—

See "If your vehicle will not start" in Part 4.

NOTICE:

Do not crank for more than 30 seconds at a time. This may overheat the starter and wiring systems.

Do not race a cold engine.

If the engine becomes difficult to start or stalls frequently, have the engine checked immediately.

Precautions for turning off a turbo engine (2L-T engine)

After high-speed or extended driving, etc., requiring a heavy engine load, the engine should be allowed to idle, as shown in the chart, before turning it off.

Driving condition and required idling time
Normal city driving Idling time—Not necessary
High-speed driving About 80 km/h (50 mph) Idling time—About 20 seconds About 100 km/h (63 mph) Idling time—About 1 minute
Steep mountain slopes or continued driving above 100 km/h (63 mph) Idling time—About 2 minutes

NOTICE:

Never turn the engine off immediately after a heavy load. This may cause severe engine damage.

Pretrip safety check

It is a good idea to review the safety check before starting out on a trip. A few minutes of checking can help ensure safe and pleasant driving. Just a basic familiarity with your vehicle is required and a careful eye! Or, if you would like, your Toyota dealer will be pleased to make this check for you at a nominal cost.

CAUTION:

If you make this check in an enclosed garage, make sure there is adequate ventilation. Engine exhaust is poisonous.

BEFORE STARTING THE ENGINE

Outside the vehicle

Tires (spare included). Check the pressure with a gauge and look carefully for cuts, damage, or excessive wear.

Wheel nuts. Make sure no nuts are missing or loose.

Fluid leaks. After the vehicle has been parked for a while, check underneath for leaking fuel, oil, water, or fluid. (Water dripping from the air conditioner after use is normal.)

Wiper blades. Look for wear or cracks.

Lights. Make sure that the headlights, stop lights, tail lights, turn signals and other lights are all working. Check the headlight aim.

Inside the vehicle

Jack and wheel nut wrench. Make sure you have your jack and wheel nut wrench.

Seat belts. Check that the buckles lock securely. Make sure that the belts are not worn or frayed.

Horn. Does it work?

Instruments and controls. Especially make sure that the warning lights, instrument lights, and defroster are working.

Wipers and washer. Make sure that they both work and that the wipers do not streak.

Brakes. Make sure that the pedal has enough clearance. (See Chapter 7-2 for instructions.)

Spare fuses. Make sure you have spare fuses. They should cover all the amperage ratings designated on the fuse box lid.

In the engine compartment

Coolant level. Make sure that the coolant level is correct. (See Chapter 7-2 for instructions.)

Radiator and hoses. Make sure the front of the radiator is clean—not blocked with leaves, dirt, or bugs. Check the hoses for cracks, kinks, rot, and loose connections.

Battery and cables. All the battery cells should be filled to the proper level with distilled water. Look for corroded or loose terminals and a cracked case. Check the cables for good condition and connections.

Wiring. Look for damaged, loose, or disconnected wires.

Brake and clutch fluid levels. Make sure that the brake and clutch fluid levels are correct. (See Chapter 7-2 for instructions.)

Engine drive belts. Check all belts for fraying, cracks, wear or oiliness. Apply thumb pressure between the pulleys. The deflection of each belt should be within the specified limits. (See Chapter 7-2 for instructions.)

Fuel lines. Check the lines for leaks or loose connections.

AFTER STARTING THE ENGINE

Exhaust system. Look for cracks, holes and loose supports. Listen for any leakage. Have any leaks fixed immediately. (See carbon monoxide warning in Part 2.)

Power steering fluid. With the engine idling, give the steering wheel several end-to-end turns and check the fluid level. (See Chapter 7-2 for instructions.)

Engine oil level. Stop the engine and check the dipstick with the vehicle parked on a level spot. (See Chapter 7-2 for instructions.)

WHILE DRIVING

Instruments. Make sure that the speedometer and gauges are working.

Brakes. At a safe place make sure the brakes do not pull.

Anything unusual? Look for loose parts and leaks. Listen for abnormal noises.

If everything looks O.K., set your mind at ease and enjoy your trip!

Tips for driving in various conditions

- Always slow down in gusty crosswinds. This will allow you much better control.
- Drive slowly onto curbs and, if possible, at a right angle. Avoid driving onto high, sharp-edged objects and other road hazards. Failure to do so can lead to severe tire damage resulting in tire bursts.
- When parking on a hill, turn the front wheels until they touch the curb so that the vehicle will not roll. Apply the parking brake, and place the transmission in first or reverse. If necessary, block the wheels.
- Washing your vehicle or driving through deep water may get the brakes wet. To see whether they are wet, check that there is no traffic near you, and then press the pedal lightly. If you do not feel a normal braking force, the brakes are probably wet. To dry them, drive the vehicle cautiously while lightly pressing the brake pedal with the parking brake pulled. If they still do not work safely, pull to the side of the road and call a Toyota dealer for assistance.
- Toyota recommends not using four-wheel drive on dry hard-surfaced roads, because four-wheel driving will cause unnecessary noise and wear, and poor fuel economy.

- In cold temperatures, noise may occur when driving in two-wheel drive before the transfer is warmed up. Therefore, first drive in four-wheel drive until the transfer is warmed up.

CAUTION:

- **Before driving off, make sure that the parking brake is fully released and the parking brake reminder light is off.**
- **Do not leave your vehicle unattended while the engine is running.**
- **Do not rest your foot on the brake pedal while driving. It can cause dangerous overheating, needless wear, and poor fuel economy.**
- **To drive down a long or steep hill, reduce your speed and downshift. Remember, if you ride the brakes excessively, they may overheat and not work properly.**
- **Be careful when accelerating, upshifting, downshifting or braking on a slippery surface. Sudden acceleration or engine braking could cause the vehicle to spin or skid.**
- **Do not continue normal driving when the brakes are wet. If they are wet, your vehicle will require a longer stopping distance, and it may pull to one side when the brakes are applied. Also, the parking brake will not hold the vehicle securely.**

Off-road driving precautions

CAUTION:

Always observe the following precautions to minimize the risk of serious personal injury or damage to your vehicle:

- **Drive carefully when off the road. Do not take unnecessary risks by driving in dangerous places.**
- **Do not grip the steering wheel spokes when driving off-road. A bad bump could jerk the wheel and injure your hands. Keep both hands and especially your thumbs on the outside of the rim.**
- **Always check your brakes for effectiveness immediately after driving in sand, mud, water or snow.**
- **After driving through tall grass, mud, rock, sand, rivers, etc., check that there is no grass, bush, paper, rags, stone, sand, etc. adhering or trapped on the underbody. If the vehicle is used with these materials trapped or adhered to the underbody, this condition may reach a point where a breakdown or fire could occur.**
- **The driver and all passengers should fasten their seat belts whenever the vehicle is moving.**

NOTICE:

If driving through water, such as when crossing shallow streams, first check the depth of the water and the bottom of the river bed for firmness. Drive slowly and avoid deep water. Take all necessary safety measures to ensure that damage to the engine or other components does not occur. Water entering the engine air intake will cause severe engine damage.

Always perform a maintenance inspection after each day of off-road driving that has taken you through sand, mud, or water.

Winter driving tips

Make sure you have ethylene-glycol antifreeze in the radiator.

NOTICE:

Do not use alcohol type antifreeze.

Check the condition of the battery and cables.

Cold temperatures reduce the capacity of any battery, so it must be in top shape to provide enough power for winter starting. Chapter 7-3 tells you how to visually inspect the battery. Your Toyota dealer and most service stations will be pleased to check the level of charge.

Make sure the engine oil viscosity is suitable for the cold weather.

See Chapter 7-2 for recommended viscosity. Leaving a heavy summer oil in your vehicle during winter months may cause harder starting. If you are not sure about which oil to use, call your Toyota dealer—he will be pleased to help.

Keep the door locks from freezing.

Squirt lock de-icer or glycerine into the locks to keep them from freezing. To open a frozen lock, try heating the key before inserting it.

Use a washer fluid containing an antifreeze solution.

This product is available at your Toyota dealer and most auto parts stores. Follow the manufacturer's directions for how much to mix with water.

NOTICE:

Do not use engine antifreeze or any other substitute as washer fluid because it may damage your vehicle's paint.

Do not use your parking brake when there is a possibility it could freeze.

When parking, put the transmission into first or reverse and block the front wheels. Do not use the parking brake, or snow or water accumulated in and around the parking brake mechanism may freeze the parking brake making it hard to release.

Keep ice and snow from accumulating under the fenders.

Ice and snow built up under your fenders can make steering difficult. During bad winter driving, stop and check under the fenders occasionally.

Depending on where you are driving, we recommend you carry some emergency equipment.

Some of the things you might put in the vehicle are tire chains, window scraper, bag of sand or salt, flares, small shovel, jumper cables, etc.

Trailer towing

Your vehicle is designed primarily as a passenger-and-load-carrying vehicle. Towing a trailer will have an adverse effect on handling, performance, braking, durability and driving economy (fuel consumption, etc.). Your safety and satisfaction depend on the proper use of correct equipment and cautious driving habits. For your safety and the safety of others, you must not overload your vehicle or trailer. Ask your local Toyota dealer for further details before towing, as there are additional legal requirements in some countries.

WEIGHT LIMITS

Before towing, confirm the towing capacity with your local Toyota dealer or the vehicle documents and make sure your trailer is within the towing capacity.

Towing capacity has been tested at sea-level. If you have to go to a high mountain area, keep in mind that the engine power and towing capacity will decrease.

TOWING BRACKETS

Toyota recommends using only Toyota-genuine-bracket.

TIRES

- Ensure that your vehicle's tires are properly inflated. See Chapter 7-2 for instructions.
- The trailer tires should be inflated to the pressure recommended by the trailer manufacturer in respect to the total trailer weight.

TRAILER LIGHTS

- Check for correct operation of the turn signals and stop lights each time you hitch up. Direct splicing may damage your vehicle's electrical system and cause a malfunction of your lights.

BREAK-IN SCHEDULE

- Toyota recommends that you do not tow a trailer with a new vehicle or a vehicle with any new power train component (engine, transmission, differential, wheel bearing, etc.) for the first 800 km (500 miles) of driving.

MAINTENANCE

- If you tow a trailer, your vehicle will require more frequent maintenace due to the additional load.

PRE-TOWING SAFETY CHECK

- Be sure not to exceed designated maximum load for the ball coupling of the towing bracket. Please remember that the ball coupling load will increase the load on the vehicle. Maximum permissible rear axle capacity must not be exceeded.
- Be sure the trailer cargo is securely loaded so that it may not shift.
- If the traffic behind the trailer cannot be seen properly with the standard rear view mirrors, additional outside mirrors will be necessary. Both outside mirrors must be fitted on folding arms and adjusted to give a good rear view at all times.

TRAILER TOWING TIPS

When towing a trailer, your vehicle will handle differently than when not towing. The three main causes of vehicle-trailer accidents are driver error, excessive speed and improper trailer loading. Keep these in mind when towing:

- Before starting out, check operation of the lights and all vehicle-trailer connections. After driving a short distance, stop and recheck the lights and connections. Before actually towing a trailer, practice turning, stopping and backing with a trailer in an area away from traffic until you learn the feel.
- Because stopping distance may be increased, vehicle-to-vehicle distance should be increased when towing a trailer. For each 10 km/h (6 mph) of speed, allow at least one vehicle and trailer length between you and the vehicle ahead. Avoid sudden braking as you may skid, resulting in jackknifing and loss of control. This is especially true on wet or slippery surfaces.
- Avoid jerky starts or sudden acceleration. Prevent excessive clutch slippage by keeping engine rpm low and not racing the engine. Always start out in first gear.
- Avoid jerky steering and sharp turns. The trailer could hit your vehicle in a tight turn. Slow down before making a turn to avoid the necessity of sudden braking.

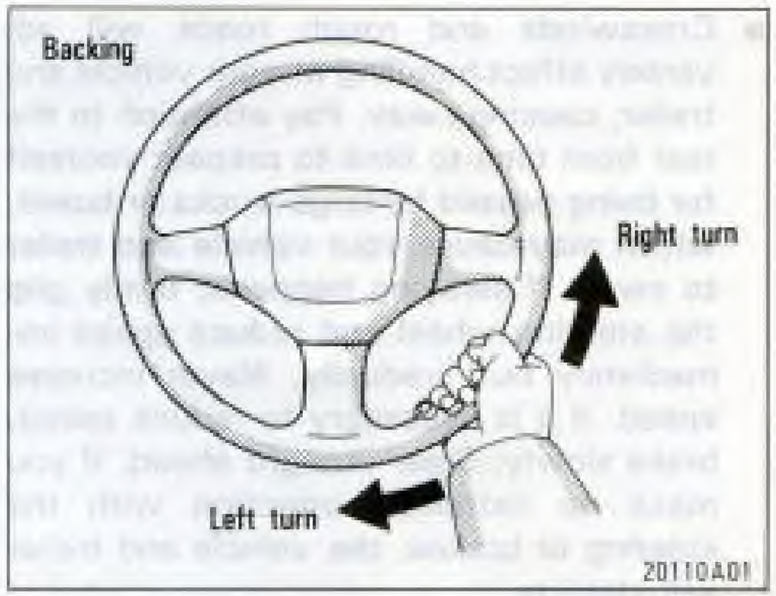

- Backing with a trailer is difficult and requires practice. Have someone guide you when backing to reduce the risk of an accident.
- Remember that when making a turn, the trailer wheels will be closer than the vehicle wheels to the inside of the turn. Therefore, compensate for this by making a larger than normal turning radius with your vehicle.

- Crosswinds and rough roads will adversely affect handling of your vehicle and trailer, causing sway. Pay attention to the rear from time to time to prepare yourself for being passed by large trucks or buses, which may cause your vehicle and trailer to sway. If swaying happens, firmly grip the steering wheel and reduce speed immediately but gradually. Never increase speed. If it is necessary to reduce speed, brake slowly. Steer straight ahead. If you make no extreme correction with the steering or brakes, the vehicle and trailer will stabilize.
- Be careful when passing other vehicles. Passing requires considerable distance. After passing a vehicle, do not forget the length of your trailer and be sure you have plenty of room before changing lanes.
- In order to maintain engine braking efficiency, do not use fifth gear.
- Because of the added load of the trailer, your vehicle's engine may overheat on hot days (at temperatures over 30 °C [85 °F]) when going up a long or steep grade with a trailer. If the engine temperature gauge indicates overheating, immediately turn off the air conditioner (if in use), pull off the road and stop in a safe spot. Refer to "If your vehicle overheats" in Part 4 of this manual.
- Always place wheel blocks under both the vehicle and trailer wheels when parking. Apply the parking brake firmly. Put the transmission in first or reverse.

CAUTION:

- **Observe the legal maximum speeds for trailer towing.**
- **Slow down and downshift before descending steep or long downhill grades. Do not make sudden downshifts.**
- **Avoid holding the brake pedal down too long or too frequently. This could cause the brakes to overheat and result in reduced braking efficiency.**

How to save fuel and make your vehicle last longer, too

Getting more kilometers/mileage from a liter/gallon of fuel is easy—just take it easy. It will help make your vehicle last longer, too. Here are some specific tips on how to save money on both fuel and repairs:

- **Keep your tires inflated at the correct pressure.** Underinflation causes tire wear and wastes fuel. See Chapter 7-2 for instructions.
- **Do not carry unneeded weight in your vehicle.** Excess weight puts a heavier load on the engine, causing greater fuel consumption.
- **Avoid lengthy warm-up idling.** Once the engine is running smoothly, begin driving—but gently. Remember, however, that in cold winter days this may take a little longer.
- **Accelerate slowly and smoothly.** Avoid jackrabbit starts. Get into high gear as quickly as possible.
- **Avoid long engine idling.** If you have a long wait and you are not in traffic, it is better to turn off the engine and start again later.
- **Avoid engine lug or overrevving.** Use a gear range suitable for the road on which you are travelling.

- **Avoid continuous speeding up and slowing down.** Stop-and-go driving wastes fuel.
- **Avoid unnecessary stopping and braking.** Maintain a steady pace. Try to time the traffic signals so you only need to stop as little as possible or take advantage of through streets to avoid traffic lights. Keep a proper distance from other vehicles to avoid sudden braking. This will also reduce wear on your brakes.
- **Avoid heavy traffic or traffic jams whenever possible.**
- **Do not rest your foot on the clutch or brake pedal.** This causes needless wear, overheating and poor fuel economy.
- **Maintain a moderate speed on highways.** The faster you drive, the greater the fuel consumption. By reducing your speed, you will cut down on fuel consumption.
- **Keep the front wheels in proper alignment.** Avoid hitting the curb and slow down on rough roads. Improper alignment not only causes faster tire wear but also puts an extra load on the engine, which, in turn, wastes fuel.
- **Keep the bottom of your vehicle free from mud, etc.** This not only lessens weight but also helps prevent corrosion.
- **Keep your vehicle tuned-up and in top shape.** A dirty air cleaner, carburetor out of adjustment, improper valve clearance, dirty plugs, dirty oil and grease, brakes not adjusted, etc. all lower engine performance and contribute to poor fuel economy. For longer life of all parts and lower operating costs, keep all maintenance work on schedule, and if you often drive under severe conditions, see that your vehicle receives more frequent maintenance.

CAUTION:

Never turn off the engine to coast down hills. Your power steering and brake booster will not function without the engine running. Also, the emission control system operates properly only when the engine is running.

Part 4
IN CASE OF AN EMERGENCY

- If your vehicle will not start
- If your engine stalls while driving
- If your vehicle overheats
- If you have a flat tire
- If your vehicle needs to be towed
- If the electric moon roof does not close
- If you lose your keys

If your vehicle will not start—
(a) Simple checks

Before making these checks, make sure you have followed the correct starting procedure given in "How to start the engine" in Part 3 and that you have sufficient fuel.

If the engine is not turning over or is turning over too slowly—

1. Check that the battery terminals are tight and clean.

2. If the battery terminals are O.K., switch on the interior light.

3. If the light is out, dim or goes out when the starter is cranked, the battery is discharged. You may try jump starting or, if your vehicle is not equipped with a catalytic converter, push starting. A vehicle with catalytic converter cannot be push started. Diesel-powered vehicles may not be push-started if the battery is discharged too much. See "(d) Jump starting" and "(e) Push starting" for further instructions.

If the light is O.K., but the engine still will not start, it needs adjustment or repair. Call a Toyota dealer or qualified repair shop.

NOTICE:

Do not pull-start the vehicle. It may damage the vehicle or cause a collision when the engine starts. On vehicles with a catalytic converter, do not try push-starting either. The catalytic converter may overheat and become a fire hazard.

If the engine turns over at its normal speed but will not start—

Gasoline-powered vehicles

1. Check that all the push-on connectors are tight at the ignition coil, distributor, and spark plugs.

See Chapter 7-1 for locations of these parts.

2. If the connectors are O.K., the engine may be flooded because of repeated cranking. See "(b) Starting the flooded engine" for further instructions.

Diesel-powered vehicles

1. If you are starting the engine that has died from an empty tank, you may have needed to bleed the fuel system before cranking the engine. See "(c) Bleeding the fuel system" for further instructions.

2. If the fuel system is O.K., but the engine still will not start, it needs adjustment or repair. Call a Toyota dealer or qualified repair shop for assistance.

(b) Starting a flooded engine (gasoline engine)

If the engine will not start, your engine may be flooded because of repeated cranking.

If this happens:

- 22R engine—Depress the accelerator pedal and hold it to the floor for 15 or 20 seconds. Then try starting the engine without releasing the accelerator pedal. Do not pump the pedal—just keep it held to the floor.
- 22R-E engine—Turn the key to "START" with the accelerator pedal held down. Keep the key and accelerator pedal for 15 seconds and release them. Then try starting the engine with your foot off the accelerator pedal.

If the engine does not start after 15 seconds of cranking, release the key, wait a few minutes and try again.

On vehicles without a catalytic converter, if the engine does not start with the procedure described above, try the following.

1. Remove the spark plugs and dry the wet electrodes of the plugs in heat with a drier.
2. Turn the key to "START" with the accelerator pedal held down for 15 seconds.
3. Install the spark plugs.
4. Try starting the engine with your foot off the accelerator pedal.

If the engine still will not start, it needs adjustment or repair. Call a Toyota dealer or qualified repair shop for assistance.

NOTICE:

Do not crank for more than 15 seconds at a time. This may overheat the starter and wiring systems.

(c) Bleeding the fuel system (diesel engine)

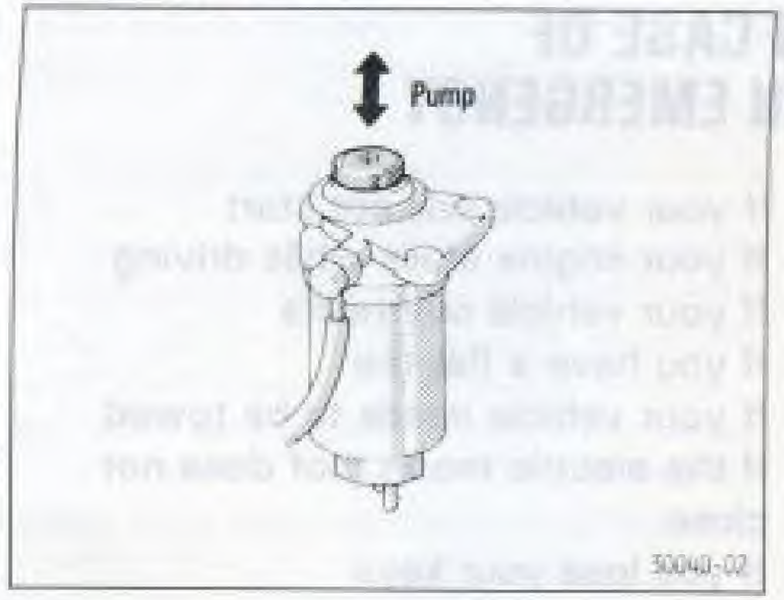

If you run out of fuel and the engine dies, the engine may not restart after refueling. In such case, operate the priming pump until you feel more resistance.

(d) Jump starting

To avoid serious personal injury and damage to your vehicle which might result from battery explosion, acid burns, electrical burns, or damaged electronic components, these instructions must be followed precisely.

If you are unsure about how to follow this procedure, we strongly recommend that you seek the help of a competent mechanic or towing service.

CAUTION:

- **Batteries contain sulfuric acid which is poisonous and corrosive. Wear protective safety glasses when jump starting, and avoid spilling acid on your skin, clothing, or vehicle.**
- **If you should accidentally get acid on yourself or in your eyes, remove any contaminated clothing and flush the affected area with water for at least 15 minutes. Then get immediate medical attention. If possible, continue to apply water with a sponge or cloth while en route to the medical office.**
- **The gas normally produced by a battery will explode if a flame or spark is brought near. Use only standardised jumper cables and do not smoke or light a match while jump starting.**

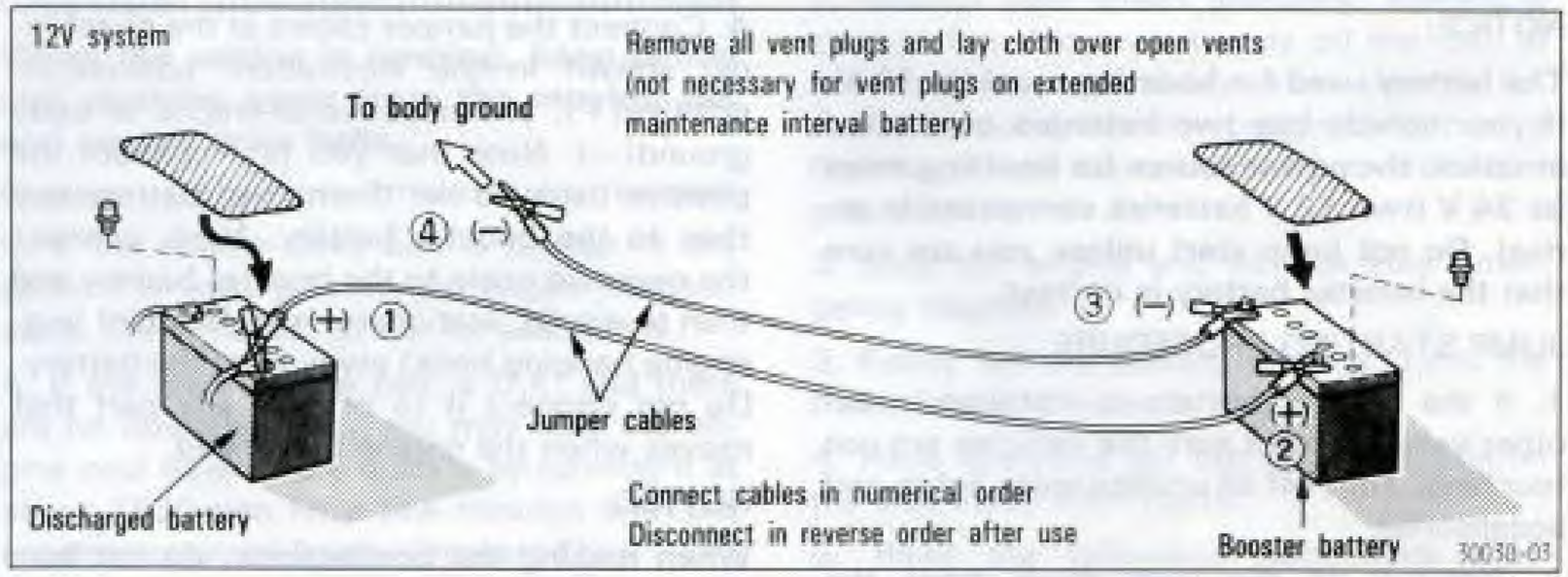

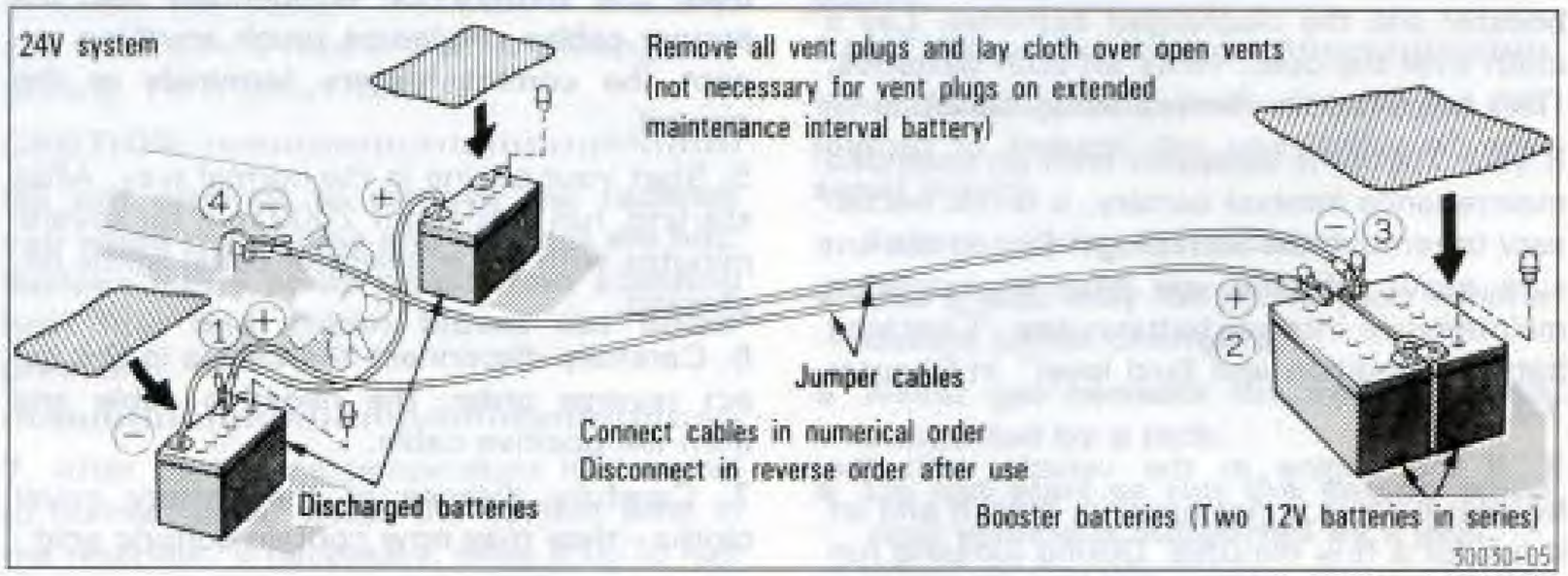

NOTICE:

The battery used for boosting must be 12 V. If your vehicle has two batteries connected in series, the power source for boosting must be 24 V (two 12 V batteries connected in series). Do not jump start unless you are sure that the booster battery is correct.

JUMP STARTING PROCEDURE

1. If the booster battery is installed in another vehicle, make sure the vehicles are not touching. Turn off all unnecessary lights and accessories.

2. Remove all the vent plugs from the booster and the discharged batteries. Lay a cloth over the open vents on both batteries. (This helps reduce the explosion hazard.)

If your Toyota is equipped with an extended maintenance interval battery, it is not necessary to remove the vent plugs. (If you are unsure about whether you have an extended maintenance interval battery, see "Checking battery condition and fluid level" in Chapter 7-3.)

3. If the engine in the vehicle with the booster battery is not running, start it and let it run for a few minutes. During jumping run the engine at about 2000 rpm with the accelerator pedal lightly depressed.

4. Connect the jumper cables in the exact order shown in the illustration: positive-to-positive(+), and negative-to-engine or body ground(−). Note that you first connect the positive cable to the discharged battery and then to the booster battery. Next, connect the negative cable to the booster battery and then to a solid, stationary, metallic point (e.g. engine hanging hook) away from the battery. Do not connect it to or near any part that moves when the engine is cranked.

NOTICE:

When making the connections, do not lean over the battery or accidentally let the jumper cables or clamps touch anything except the correct battery terminals or the ground.

5. Start your engine in the normal way. After starting, run it at about 2000 rpm for several minutes with the accelerator pedal lightly depressed.

6. Carefully disconnect the cables in the exact reverse order: the negative cable and then the positive cable.

7. Carefully dispose of the battery cover cloths—they may now contain sulfuric acid.

8. Replace all the battery vent plugs.

If the cause of your battery discharging is not apparent (for example, lights left on), you should have it checked.

If your engine stalls while driving

If your engine stalls while driving...

1. Reduce your speed gradually, keeping a straight line. Move cautiously off the road to a safe place.

2. Turn on your emergency flashers.

3. Try starting the engine again.

If the engine will not start, see "If your vehicle will not start".

CAUTION:

If the engine is not running, the power assist for the brakes and steering will not work so steering and braking will be much harder than usual.

If your vehicle overheats

If your temperature gauge indicates overheating, if you experience a loss of power, or if you hear a loud knocking or pinging noise, the engine has probably over

heated. You should follow this procedure...

1. Pull safely off the road, stop the vehicle and turn on your emergency flashers. Put the transmission in neutral and apply the parking brake. Turn off the air conditioner if it is being used.

2. If coolant or steam is boiling out of the radiator or reservoir, stop the engine. Wait until the steam subsides before opening the hood. If there is no coolant boiling over or steam, leave the engine running.

CAUTION:

To help avoid personal injury, keep the hood closed until there is no steam. Escaping steam or coolant is a sign of very high pressure.

3. Visually check to see if the engine drive belt (fan belt) is broken or loose. Look for obvious coolant leaks from the radiator, hoses, and under the vehicle. However, note that water draining from the air conditioner is normal if it has been used.

CAUTION:

When the engine is running, keep hands and clothing away from the moving fan and engine drive belts.

4. If the engine drive belt is broken or the coolant is leaking, stop the engine immediately. Call a Toyota dealer for assistance.

5. If the engine drive belt is O.K. and there are no obvious leaks, you may help the engine cool down more quickly by running it at about 1500 rpm for a few minutes with the accelerator pedal lightly depressed.

6. Check the coolant reservoir. If it is dry, add water to the reservoir while the engine is running. Fill it about half full.

CAUTION:

Do not attempt to remove the radiator cap when the engine and radiator are hot. Serious injury could result from scalding hot fluid and steam blown out under pressure.

7. After the engine temperature has cooled to normal, again check the coolant level in the reservoir. If necessary, bring it up to half full again. Serious coolant loss indicates a leak in the system. You should have it checked as soon as possible at your Toyota dealer.

If you have a flat tire—

1. Reduce your speed gradually, keeping a straight line. Move cautiously off the road to a safe place well away from the traffic. Avoid stopping on the center divider of a highway. Park on a level spot with firm ground.

2. Stop the engine and turn on your emergency flashers.

3. Firmly set the parking brake and put the transmission in reverse.

4. Have everyone get out of the vehicle on the side away from traffic.

5. Read the following instructions thoroughly.

CAUTION:

When jacking, be sure to observe the following to reduce the possibility of personal injury:

- **Follow jacking instructions.**
- **Use a jack only for lifting your vehicle during wheel changing.**
- **Never get beneath the vehicle when supported by a jack.**
- **Do not start or run the engine while your vehicle is supported by a jack.**

NOTICE:

Do not continue driving with a deflated tire. Driving even a short distance can damage a tire beyond repair.

—Required tools and spare tire (soft-top, hardtop and FRP TOP)

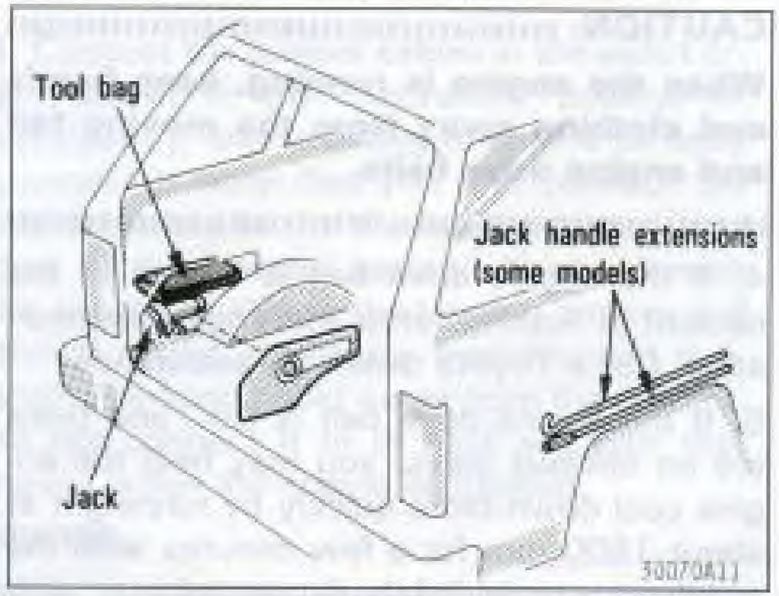

1. Get the tool bag, jack, jack handle extensions and spare tire.

To prepare yourself for an emergency, you should familiarize yourself with the use of the jack, each of the tools and their storage locations.

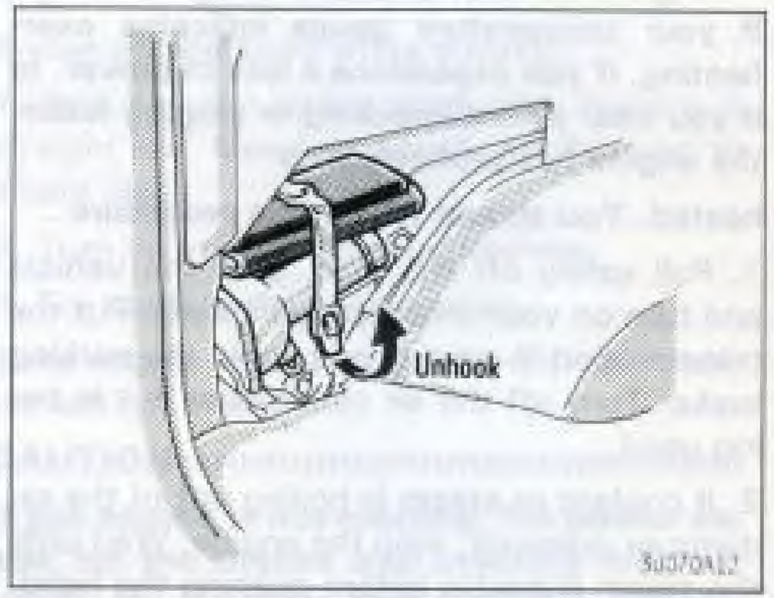

To remove the tool and jack, unhook the strap.

When storing the tool and jack, put them into place and secure to prevent them from flying forward during a collision or sudden braking.

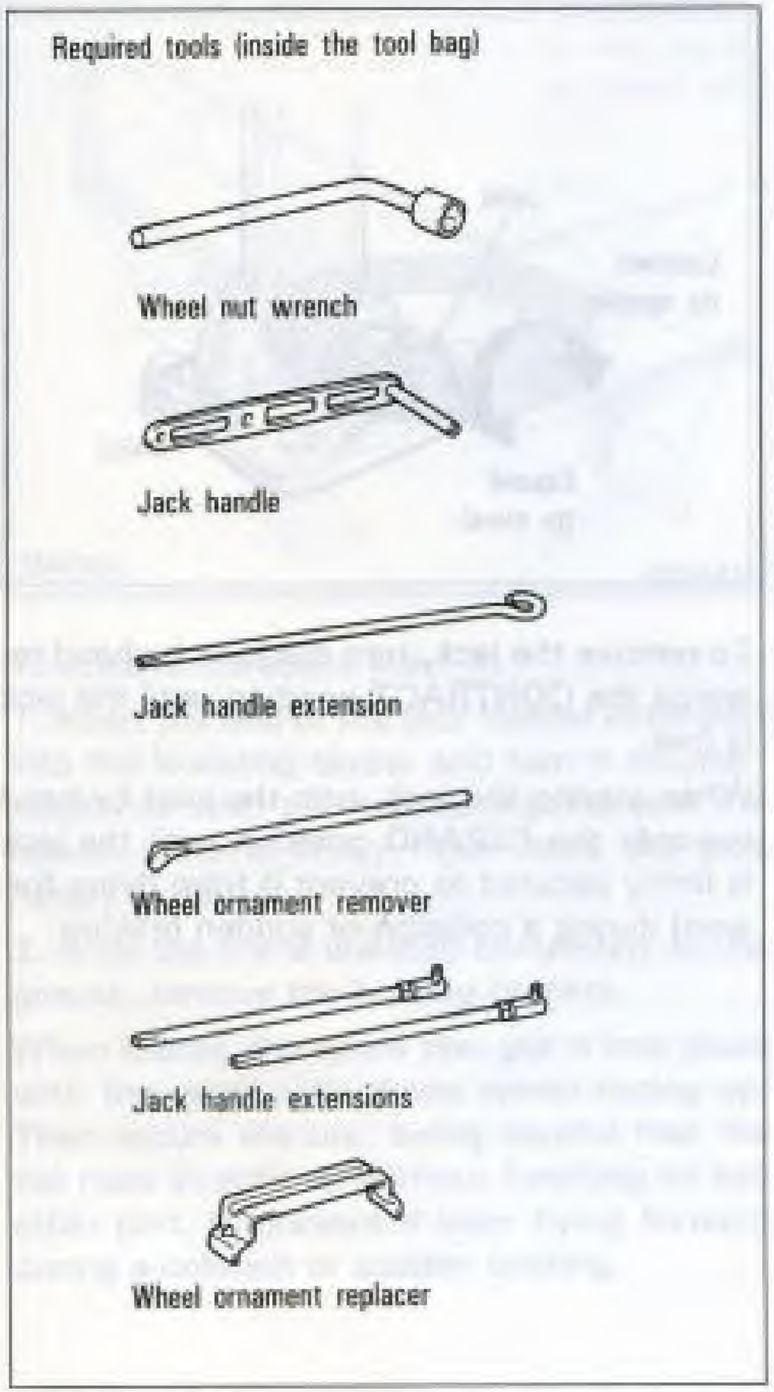

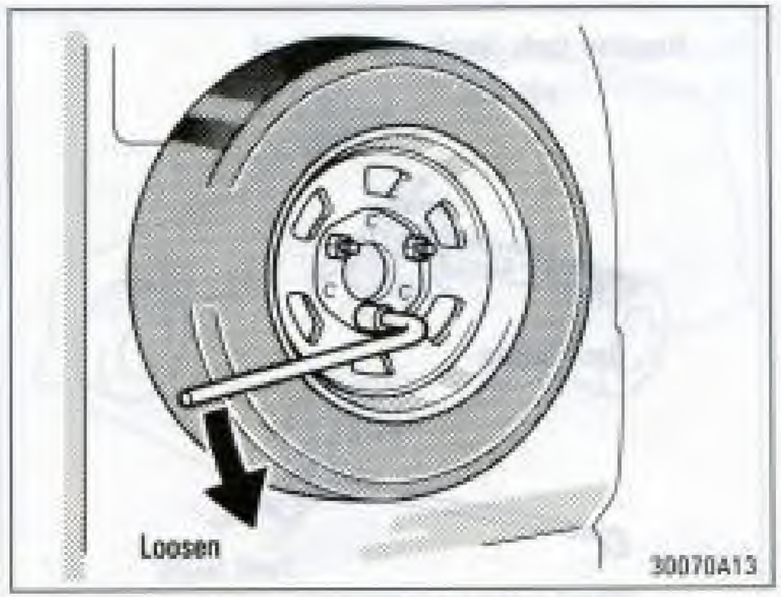

To remove the spare tire:

BACKDOOR-MOUNTED TYPE

Turn the hold-down nuts counterclockwise with the wheel nut wrench and remove them.

When storing the spare tire, put it into place and secure to prevent it from flying forward during a collision or sudden braking.

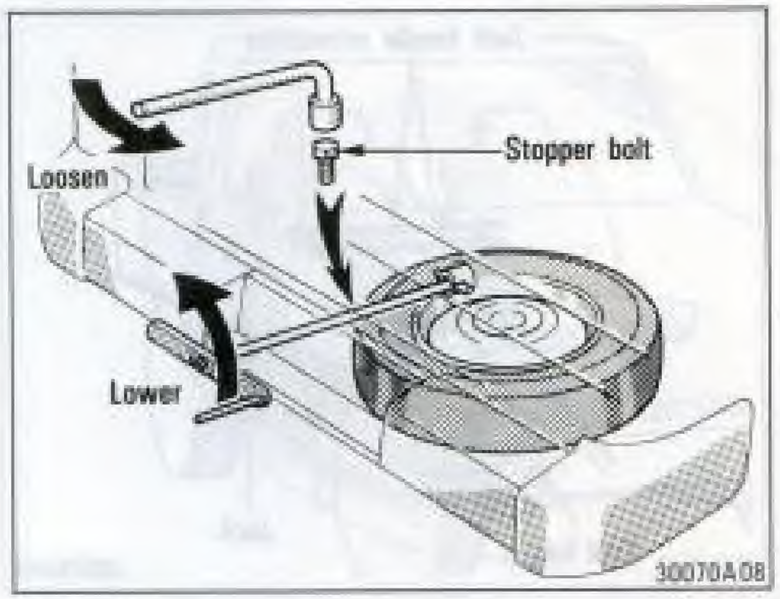

UNDERFRAME-MOUNTED TYPE

1. Remove the stopper bolt with the wheel nut wrench.

2. Insert the end of the jack handle extension into the lowering screw and turn it counterclockwise with the handle, making sure the handle remains firmly fitted onto the jack handle extension.

3. After the tire is lowered completely to the ground, remove the holding bracket.

When storing the spare tire, put it into place with the outer side of the wheel facing up. Then secure the tire, being careful that the tire rises straight up without catching on any other part, to prevent it from flying forward during a collision or sudden braking.

–Required tools and spare tire (pick-up)

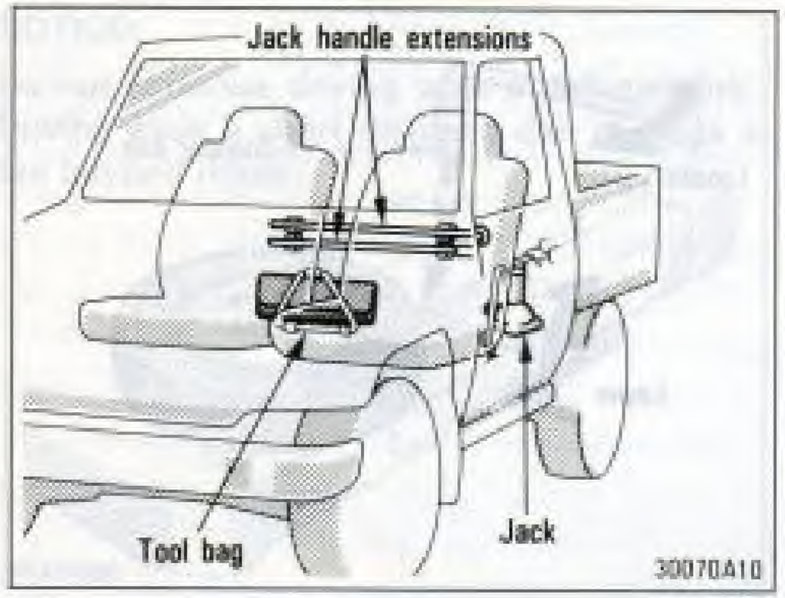

1. Get the tool bag, jack, jack handle extensions and spare tire.

To prepare yourself for an emergency, you should familiarize yourself with the use of the jack, each of the tools and their storage locations.

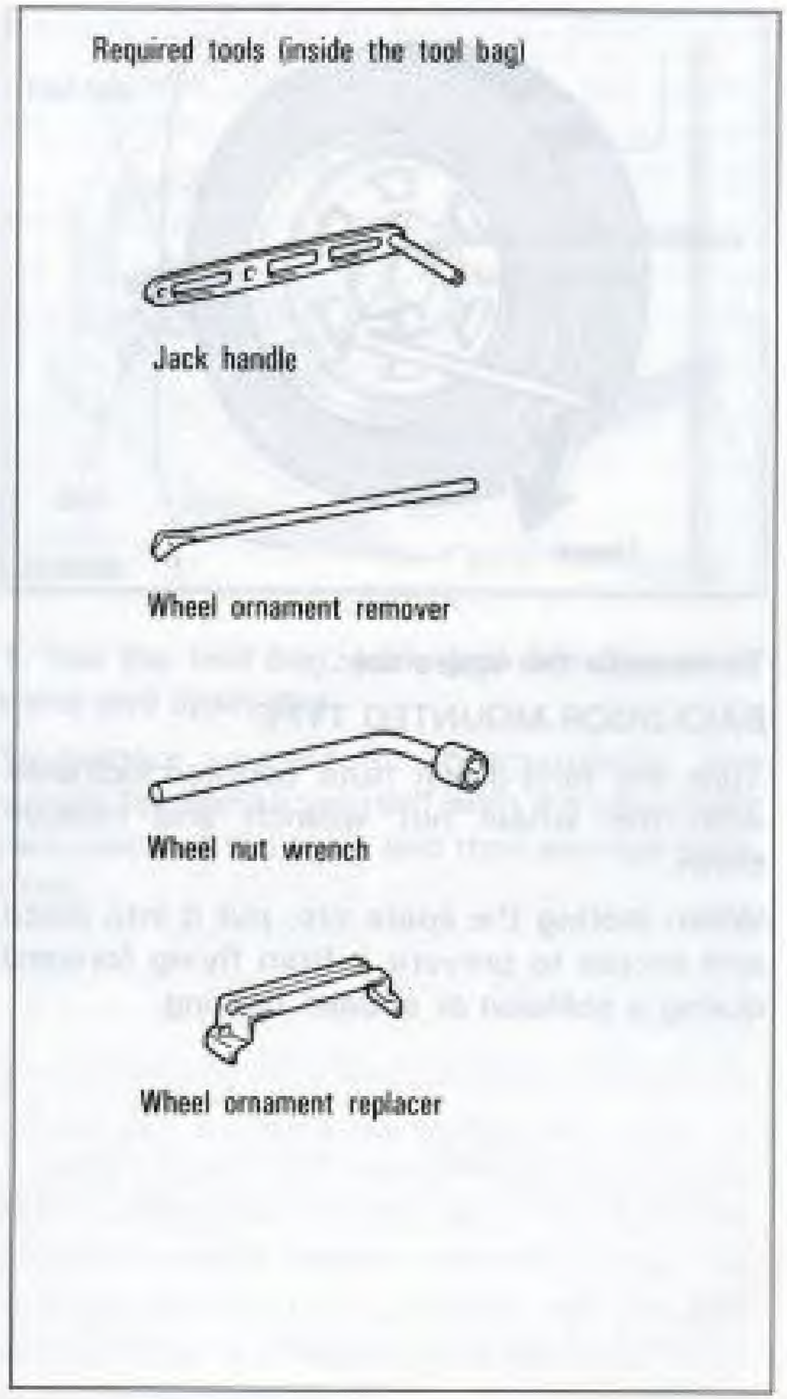

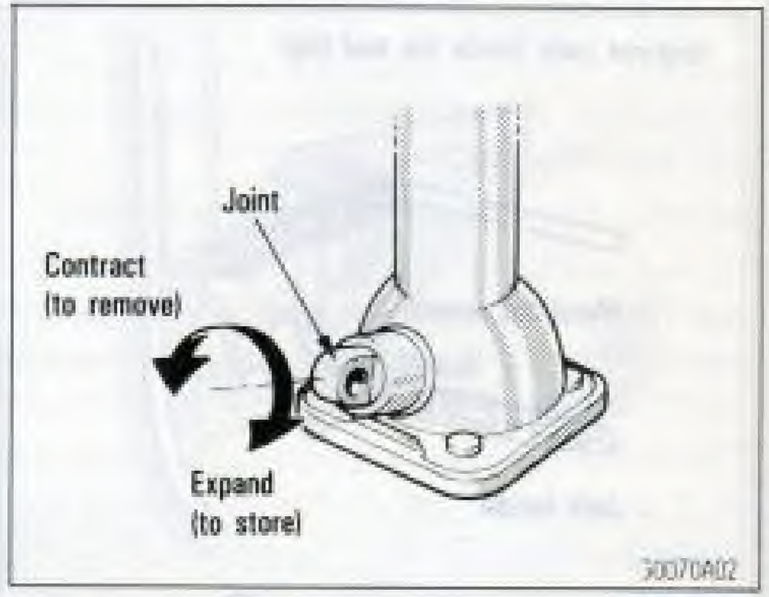

To remove the jack, turn the joint by hand towards the CONTRACT position until the jack is free.

When storing the jack, turn the joint by hand towards the EXPAND position until the jack is firmly secured to prevent it from flying forward during a collision or sudden braking.

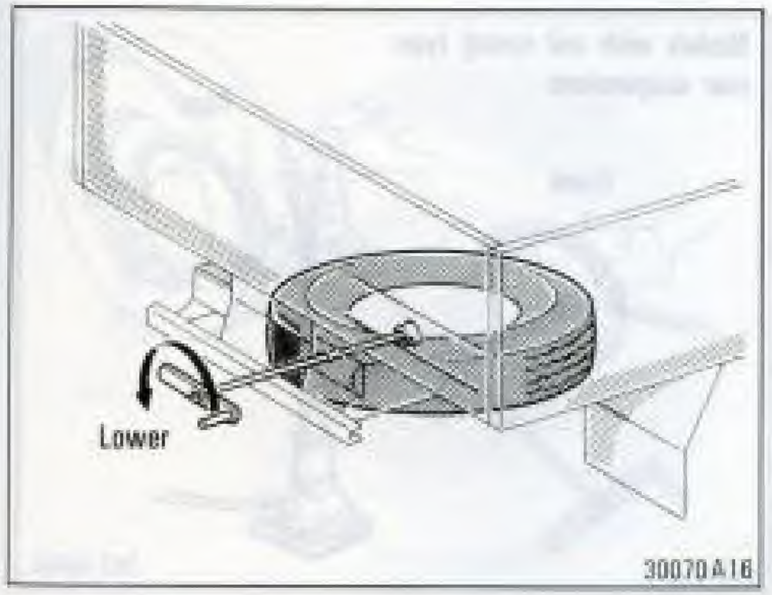

To remove the spare tire:

1. Insert the end of the jack handle extension into the lowering screw and turn it counterclockwise with the handle, making sure the handle remains firmly fitted onto the jack handle extension.

2. After the tire is lowered completely to the ground, remove the holding bracket.

When storing the spare tire, put it into place with the outer side of the wheel facing up. Then secure the tire, being careful that the tire rises straight up without catching on any other part, to prevent it from flying forward during a collision or sudden braking.

—Blocking the wheel

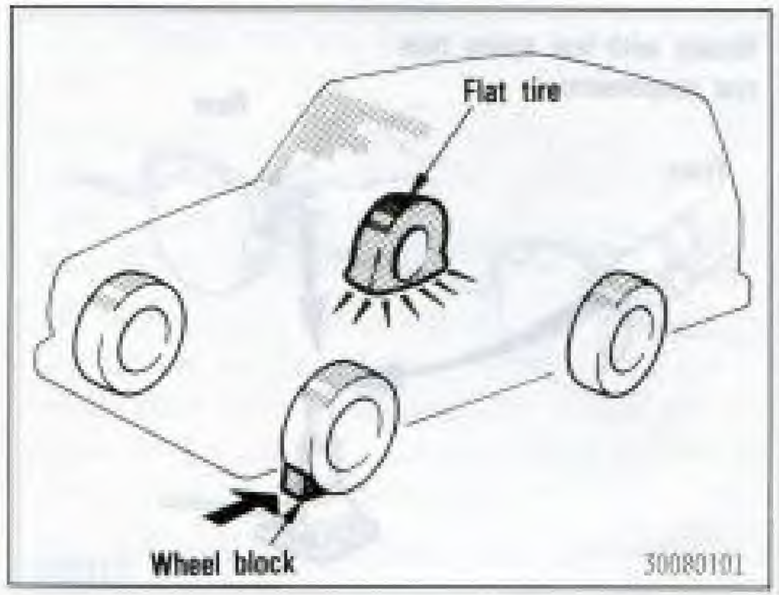

2. Block the wheel diagonally opposite the flat tire to keep the vehicle from rolling when it is jacked up.

When blocking the wheel, place the wheel block from the front for the front wheels or from the rear for the rear wheels.

—Removing wheel ornament

3. Remove the wheel ornament.

Pry off the wheel ornament, using the beveled end of the wheel ornament remover as shown. To avoid personal injury, do not attempt to pull off the ornament by hand.

—Loosening wheel nuts

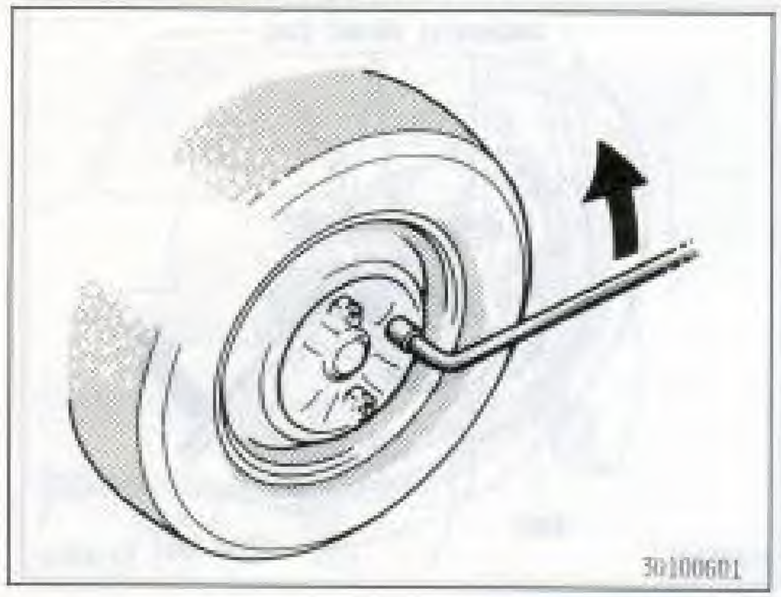

4. Loosen all the wheel nuts.

Always loosen the wheel nuts before raising the vehicle.

The nuts turn counterclockwise to loosen. To get maximum leverage, fit the wrench to the nut so that the handle is on the right side, as shown above. Grab the wrench near the end of the handle and pull up on the handle. Be careful that the wrench does not slip off the nut.

Do not remove the nuts yet—just unscrew them about one-half turn.

—Positioning the jack

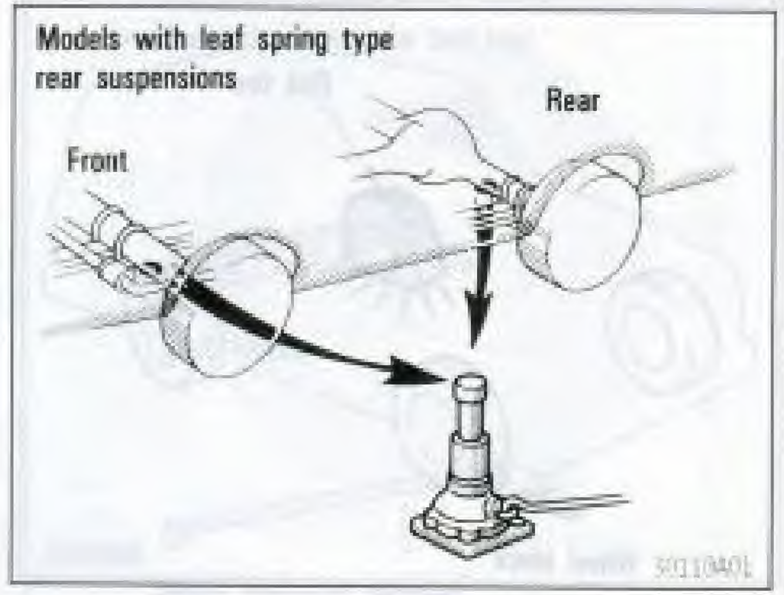

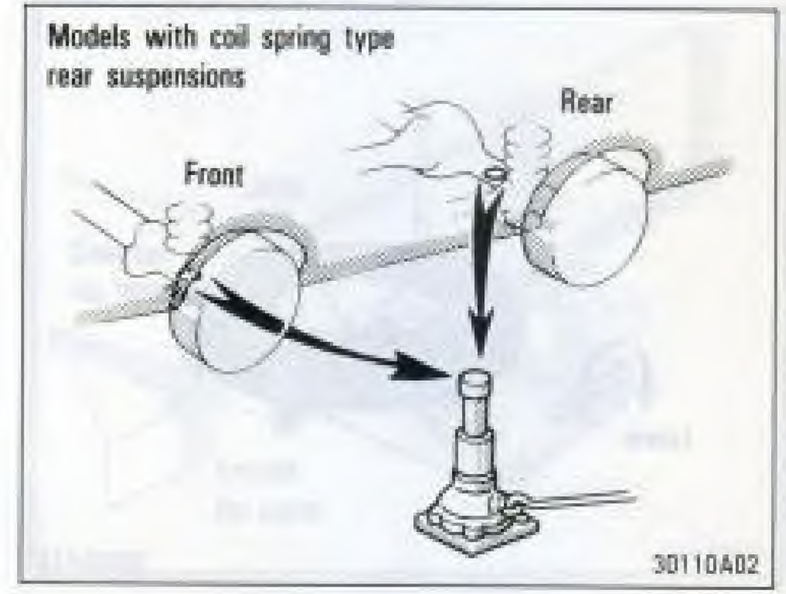

5. Position the jack at the correct jack point as shown.

Make sure that the jack is positioned on a level and solid place.

JACK POINTS:

Models with leaf spring type rear suspensions

Front—Under the front axle housing between the leaf spring and stabilizer bar

Rear—Under the rear axle housing near the wheel to be raised

Models with coil spring type rear suspensions

Front—Under the front axle housing between the suspension arm and the wheel

Rear—Under the rear axle housing between the suspension arm and the differential

—Raising your vehicle

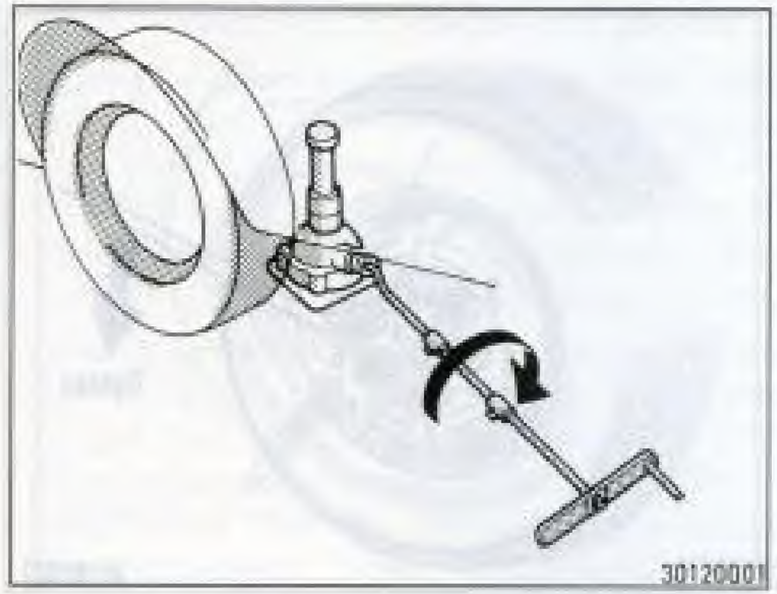

6. After making sure that no one is in the vehicle, raise it high enough so that the spare tire can be installed.

Remember you will need more ground clearance when putting on the spare tire than when removing the flat tire.

To raise the vehicle, insert the jack handle extension into the jack (it is a loose fit) and turn it clockwise with the handle, making sure the handle remains firmly fitted onto the jack handle extension. As the jack touches the vehicle and begins to lift, double-check that it is properly positioned.

CAUTION:

Never get under the vehicle when it is supported by the jack alone.

—Changing wheels

7. Remove the wheel nuts and change tires.

Lift the flat tire straight off and put it aside.

Roll the spare wheel into position and align the holes in the wheel with the bolts. Then lift up the wheel and get at least the top bolt started through its hole. Wiggle the tire and press it back over the other bolts.

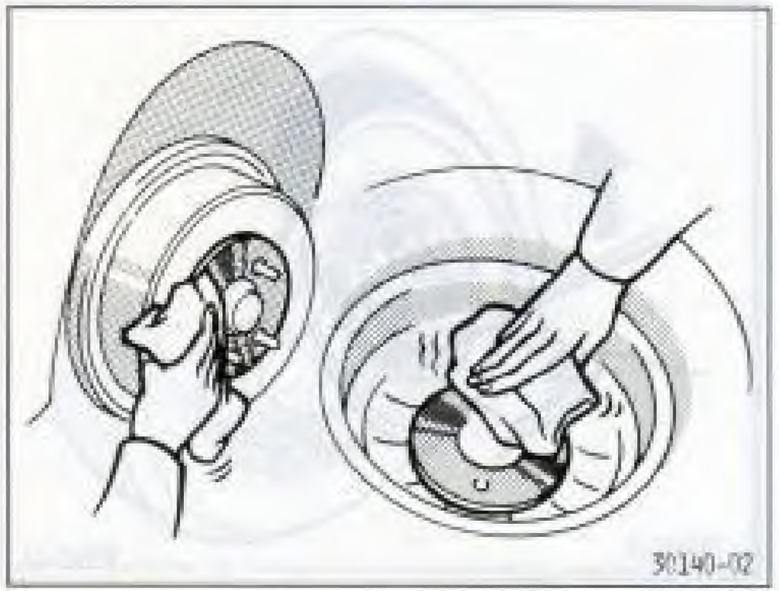

Before putting on wheels, remove any corrosion on the mounting surfaces with a wire brush or such. Installation of wheels without good metal-to-metal contact at the mounting surface can cause wheel nuts to loosen and eventually cause a wheel to come off while driving. Therefore after the first 1600 km (1000 miles), check to see that the wheel nuts are tight.

—Reinstalling wheel nuts

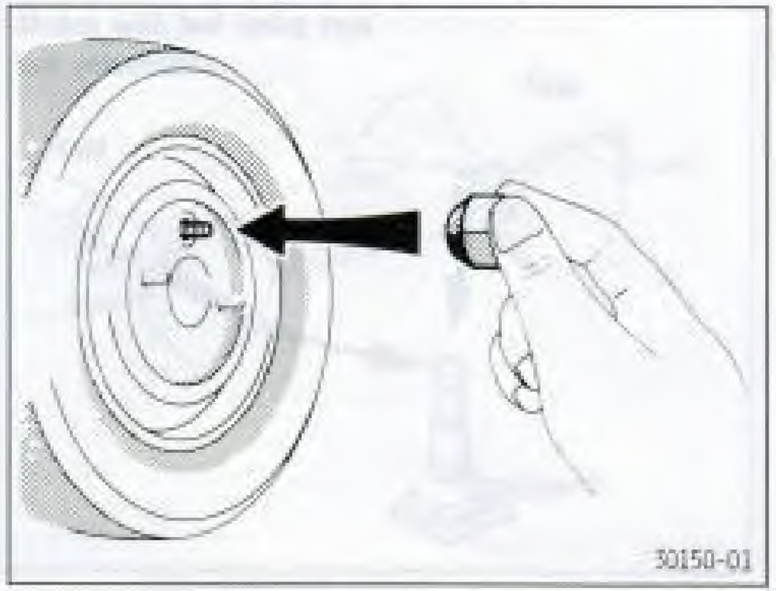

8. Reinstall all the wheel nuts finger tight.

Reinstall the wheel nuts (tapered end inward) and tighten them as much as you can by hand. Press back on the tire and see if you can tighten them more.

—Lowering your vehicle

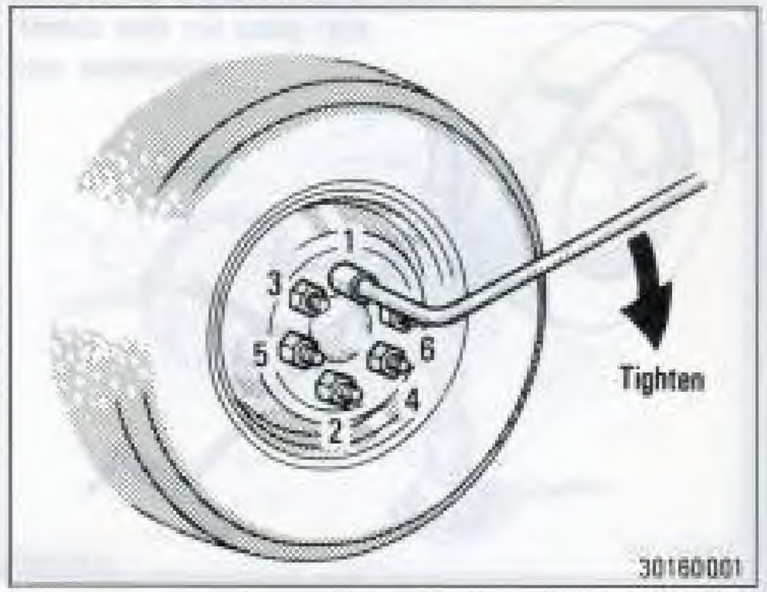

9. Lower the vehicle completely and tighten the wheel nuts.

To lower the vehicle, turn the jack handle extention counterclockwise with the handle, making sure the handle remains firmly fitted onto the jack handle extension.

Use only the wheel nut wrench to tighten the nuts. Do not use other tools or any additional leverage other than your hands, such as a hammer, pipe or your foot. Make sure the wrench is securely engaged over the nut.

Tighten each nut a little at a time in the order shown. Repeat the process until all the nuts are tight.

—Reinstalling wheel ornament

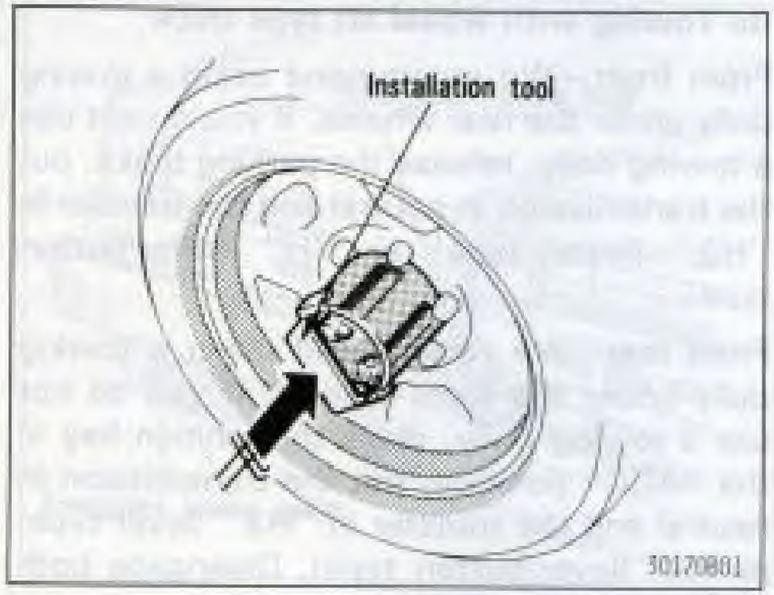

10. Reinstall the wheel ornament.

Put the wheel ornament into position and then tap it firmly with the side or heel of your hand to snap it into place.

On ornaments for free-wheeling hubs, place the installing tool over the opening and tap on the tool to snap the ornament into place. Be careful not to slip off the tool.

—After changing wheels

11. Check the air pressure of the replaced tire.

Adjust the air pressure to the specification designated in Part 8. If the pressure is lower, drive slowly to the nearest service station and fill to the correct pressure.

Do not forget to reinstall the tire inflation valve cap as dirt and moisture could get into the valve core and possibly cause air leakage. If the cap is missing, have a new one put on as soon as possible.

12. Restow all the tools, jack and flat tire securely.

As soon as possible after changing wheels, tighten the wheel nuts to the torque specified in Part 8 with a torque wrench and have a technician repair the flat tire. If, in an emergency, you have to temporarily replace a flat front tire with a spare of a different size or ply rating, replace the spare tire with the repaired tire.

This is the same procedure for changing or rotating your tires.

CAUTION:

Before driving, make sure all the tools, jack and flat tire are securely in place in their storage location to reduce the possibility of personal injury during a collision or sudden braking.

If your vehicle needs to be towed—

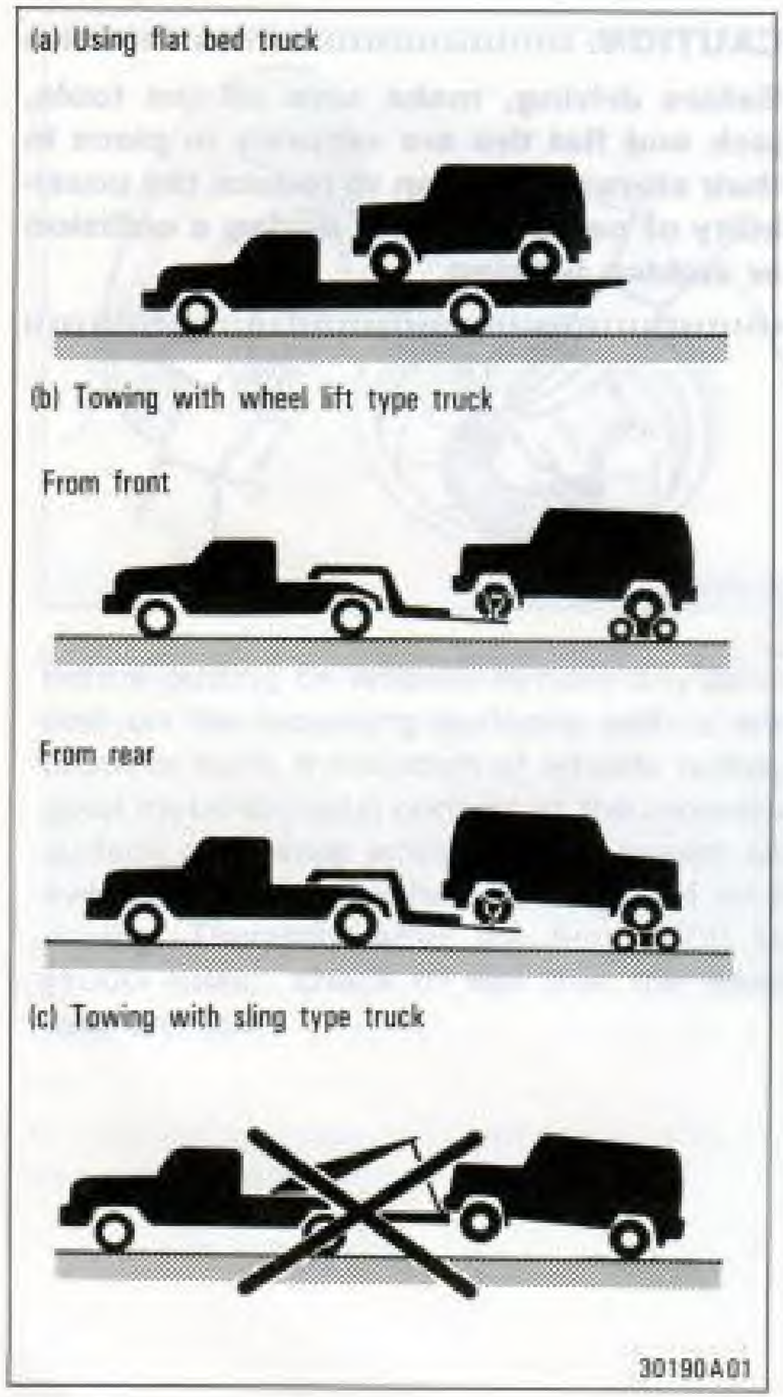

If towing is necessary, we recommend you have it done by your Toyota dealer or a commercial tow truck service.

Proper equipment will help ensure that your vehicle is not damaged while being towed. Commercial operators are generally aware of the state/provincial and local laws pertaining to towing.

Your vehicle can be damaged if it is towed incorrectly. Although most operators know the correct procedure, it is possible to make a mistake. To avoid damage to your vehicle, make sure the following few precautions are observed. If necessary, show this page to the tow truck driver.

TOWING PRECAUTIONS:

Use a safety chain system for all towing, and abide by the state/provincial and local laws. The wheels and axle on the ground must be in good condition. If they are damaged, use a towing dolly.

(a) Using flat bed truck

Toyota recommends this as the best method for your vehicle.

(b) Towing with wheel lift type truck

From front—We recommend using a towing dolly under the rear wheels. If you do not use a towing dolly, release the parking brake, put the transmission in neutral and the transfer in "H2" (lever type) or "H" (lever/button type).

From rear—We recommend using a towing dolly under the front wheels. If you do not use a towing dolly, place the ignition key in the "ACC" position, put the transmission in neutral and the transfer in "H2" (lever type) or "H" (lever/button type). Disengage both free-wheeling hubs if so equipped.

NOTICE:

Do not tow with the key removed or in the "LOCK" position when towing from the rear without a towing dolly. The steering lock mechanism is not strong enough to hold the front wheels straight.

(c) Towing with sling type truck

NOTICE:

Do not tow with sling type truck, either from the front or rear. This may cause body damage.

—Emergency towing

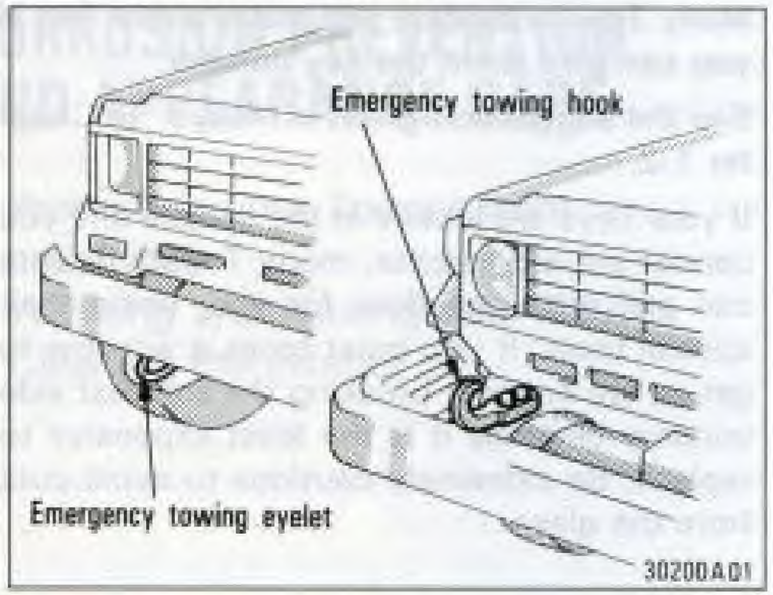

If towing service is not available in an emergency, your vehicle may be temporarily trailed by a cable secured to the emergency towing hook or eyelet.

A driver must be in the vehicle to steer it and operate the brakes.

Towing in this manner may be done only on hard-surfaced roads for a short distance and at low speeds. Also, the wheels, axles, drive train, steering and brakes must all be in good condition.

Before towing, release the parking brake, put the transmission in neutral and the transfer in "H2" (lever type) or "H" (lever/button type). If your vehicle has a lever/button type front drive control, the "H4" button must be off. The key must be in "ACC" (engine off) or "ON" (engine running).

CAUTION:

If the engine is not running, the power assist for the brakes and steering will not work so steering and braking will be much harder than usual.

—Emergency towing hook or eyelet precautions

- Before emergency towing, check that the hook or eyelet installation bolts are not loose.
- Fasten the towing rope or cable securely to the hook or eyelet.
- Do not jerk the hook or eyelet.
- To avoid damaging the hook or eyelet, do not pull from the side or at a vertical angle. Always pull straight ahead.

If the electric moon roof does not close

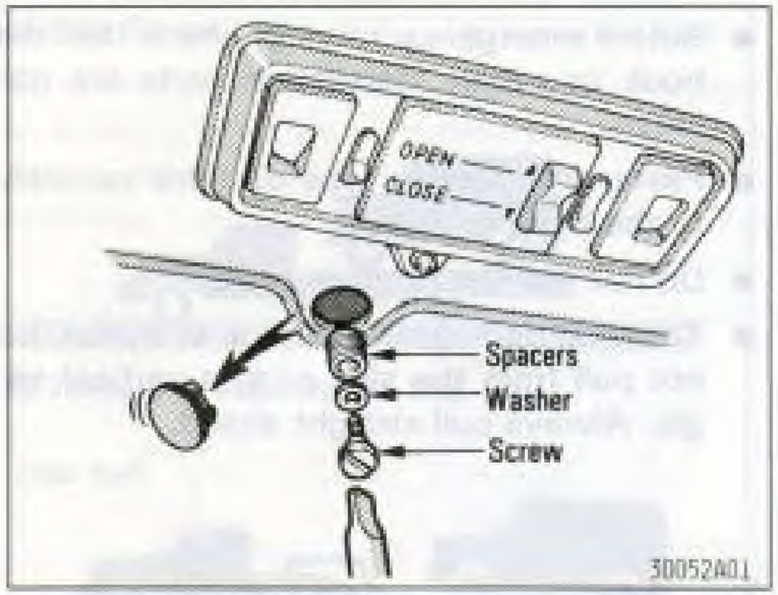

1. Take out the plug and unscrew the screw inside.

A special crank-shaped screwdriver for turning the screw and drive shaft can be found in your tool bag.

NOTICE:

Be careful not to lose this screw, the washer or the spacers as the moon roof will not operate electrically without them.

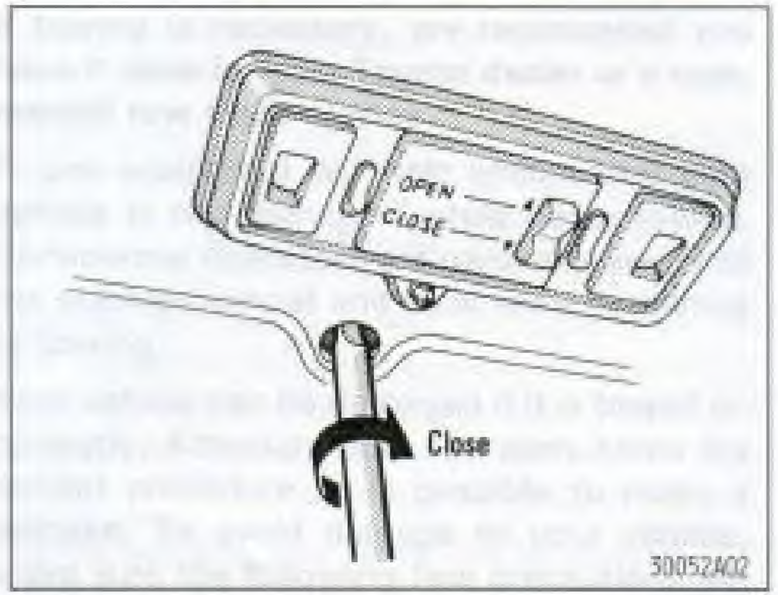

2. Close the moon roof by hand as far as it will go. Then insert the screwdriver into the hole and turn the drive shaft until the moon roof is completely closed.

Be sure to have the system checked by your Toyota dealer as soon as possible.

If you lose your keys

Many Toyota dealers can make a new key if you can give them the key number.

See the suggestion given in "Keys" in Chapter 1-2.

If your keys are locked in the vehicle and you cannot get a duplicate, many Toyota dealers can still open the door for you, using their special tools. If you must break a window to get in, we suggest breaking the smallest side window because it is the least expensive to replace. Be extremely cautious to avoid cuts from the glass.

Part 5
CORROSION PREVENTION AND APPEARANCE CARE

- Protecting your Toyota from corrosion
- Washing and waxing your Toyota
- Cleaning the interior

Protecting your Toyota from corrosion

Toyota, through its diligent research, design and utilizing the most advanced technology available, has done its part to help prevent corrosion and has provided you with the finest quality vehicle construction. Now, it is up to you. Proper care of your Toyota can help ensure long-term corrosion prevention.

The most common causes of corrosion to your vehicle are:

- The accumulation of road salt, dirt and moisture in hard-to-reach areas under the vehicle.
- Chipping of paint, or undercoating caused by minor accidents or by stones and gravel.

Care is especially important if you live in particular areas or operate your vehicle under certain environmental conditions:

- Road salt or dust control chemicals will accelerate corrosion, as will the presence of salt in the air near the sea-coast or in areas of industrial pollution.
- High humidity accelerates corrosion especially when temperatures range just above the freezing point.
- Wetness or dampness to certain parts of your vehicle for an extended period of time, may cause corrosion even though other parts of the vehicle may be dry.
- High temperatures will cause corrosion to those components of the vehicle which are prevented from quick-drying due to lack of proper ventilation.

The above signifies the necessity to keep your vehicle, particularly the underside, as clean as possible and to repair any damage to paint or protective coatings as soon as possible.

To help prevent corrosion on your Toyota, follow these guidelines:

Wash your vehicle frequently. It is, of course, necessary to keep your vehicle clean by regular washing, but to prevent corrosion, the following points should be observed:

- If you drive on salted roads in the winter or if you live near the ocean, you should hose off the undercarriage at least once a month to minimize corrosion.
- High pressure water or steam is effective for cleaning the vehicle's underside and wheel housings. Pay particular attention to these areas as it is difficult to see all the mud and dirt. It will do more harm than good to simply wet the mud and debris without removing them. The lower edge of doors, rocker panels and frame members have drain holes which should not be allowed to clog with dirt as trapped water in these areas can cause corrosion.

- Wash the underside of the vehicle thoroughly when winter is over.

See "Washing and waxing your Toyota" for more tips.

Check the condition of your vehicle's paint and trim. If you find any chips or scratches in the paint, touch them up immediately to prevent corrosion from starting. If the chips or scratches have gone through the bare metal, have a qualified body shop make the repair.

Check the interior of your vehicle. Water and dirt can accumulate under the floor mats and could cause corrosion. Occasionally check under the mats to make sure the area is dry. Be particularly careful when transporting chemicals, cleansers, fertilizers, salt, etc., and these should be transported in proper containers. If a spill or leak should occur, immediately clean and dry the area.

Use mud shields on your wheels. If you drive on salted or gravel roads, mud shields help protect your vehicle. Full-size shields, which come as near to the ground as possible, are the best. We recommend that the fittings and the area where the shields are installed be treated to resist corrosion. Your Toyota dealer will be happy to assist in supplying and installing the shields if they are recommended for your area.

Do not park your vehicle in a damp, poorly ventilated garage. If you wash your vehicle in the garage, or if you drive it in covered with water or snow, your garage may be so damp it will cause corrosion. Even if your garage is heated, a wet vehicle can corrode if the ventilation is poor.

Washing and waxing your Toyota

Wash your vehicle in the shade when the body is not hot to the touch. Use a mild car-wash soap and rinse it well.

Dirt can cause small scratches in the paint and the chemicals in some dirt and air pollutants can cause deterioration of the paint and trim. Therefore, frequent washing is recommended. If you park or drive your Toyota near the ocean or on salted roads, it is especially important to prevent corrosion.

Your vehicle can be washed in an automatic car wash. Remember, however, that the paint surface could then be scratched with the brushes. Scratches reduce the paint's gloss retention and durability. They can become apparent easily, especially on the darker paints.

The following is the adequate procedure of car washing by hand.

1. Begin by rinsing all loose dirt off the vehicle with a hose. If the underside has picked up mud or road salt, use a hard, direct stream from a hose to remove it.

2. Wash with a commercial car-wash product available at your Toyota dealer or auto parts store. Follow the manufacturer's mixing instructions carefully. Dip your sponge or cloth into the wash bucket frequently and do not rub too hard—let the soap and water remove the dirt.

Road tar may be removed with turpentine. Use warm water and car-wash soap for insects and tree sap. Commercial products are also available.

NOTICE:

Do not use gasoline or strong solvents, which may be toxic or cause damage.

3. Rinse the vehicle thoroughly. If any soap dries on the vehicle, it may cause streaking. In hot weather, you may have to rinse each section of the vehicle right after you wash it.

4. Dry the vehicle with a moist chamois or soft towel. The main purpose of drying is to remove excess water so that the vehicle will air dry without water spots. So do not rub or press hard, which might scratch the paint.

If you detect any stone chips or scratches in the paint, touch them up immediately to protect the bare metal from corrosion.

After washing your vehicle, make sure the brakes are fully dry before driving.

Polishing and waxing is recommended to maintain the original beauty of your Toyota's finish.

1. Always wash and dry the vehicle before you begin waxing, even if you are using a combined cleaner and wax.

2. Use a good quality polish and wax. If the finish has become extremely weathered, use a car-cleaning polish, followed by a separate wax. Carefully follow the manufacturer's instructions and precautions. Be sure to polish and wax the chrome trim as well as the paint.

3. Wax the vehicle again when water does not bead but remains on the surface in large patches.

Touch-up paint may be used to cover small chips or scratches.

Apply the paint soon after the damage occurs or corrosion may set in. To do a good job, use a small artist's brush and stir the paint well. Make sure the area is clean and dry. To apply the touch-up paint so it is hardly noticeable, the trick is to apply it only to the bare spots. Apply only the smallest amount possible and do not paint the surface around the scratch or chip.

Cleaning the interior

The vinyl upholstery may be easily cleaned with a mild soap or detergent and water.

First vacuum over the upholstery to remove loose dirt. Then, using a sponge or soft cloth, apply the soap solution to the vinyl. After allowing it to soak in for a few minutes to loosen the dirt, remove the dirt and wipe off the soap with a clean damp cloth. If all the dirt does not come off, repeat the procedure. Commercial foaming-type vinyl cleaners are also available which work well. Follow the manufacturer's instructions.

NOTICE:

Do not use solvent, thinner, gasoline or window cleaner on the interior.

Use a good foam-type shampoo to clean the carpets.

Begin by vacuuming thoroughly to remove as much dirt as possible. Several types of foam cleaners are available; some are in aerosol cans and others are powders or liquids which you mix with water to produce a foam. To shampoo the carpets, use a sponge or brush to apply the foam. Rub in overlapping circles. Do not apply water—the best results are obtained by keeping the carpet as dry as possible. Read the shampoo instructions and follow them closely.

The seat belts may be cleaned with mild soap and water or with lukewarm water.

Use a cloth or sponge. As you are cleaning, check the belts for excessive wear, fraying, or cuts.

NOTICE:

Do not use dye or bleach on the belts—it may weaken them.

The windows may be cleaned with any household window cleaner.

NOTICE:

When cleaning the inside of the windows, be careful not to scratch or damage the heater wires on the rear window.

If you have any questions about the cleaning of your Toyota, your local Toyota dealer will be pleased to answer them.

Part 6
MAINTENANCE REQUIREMENTS

- Maintenance facts
- Does your vehicle need repairing?

Maintenance facts

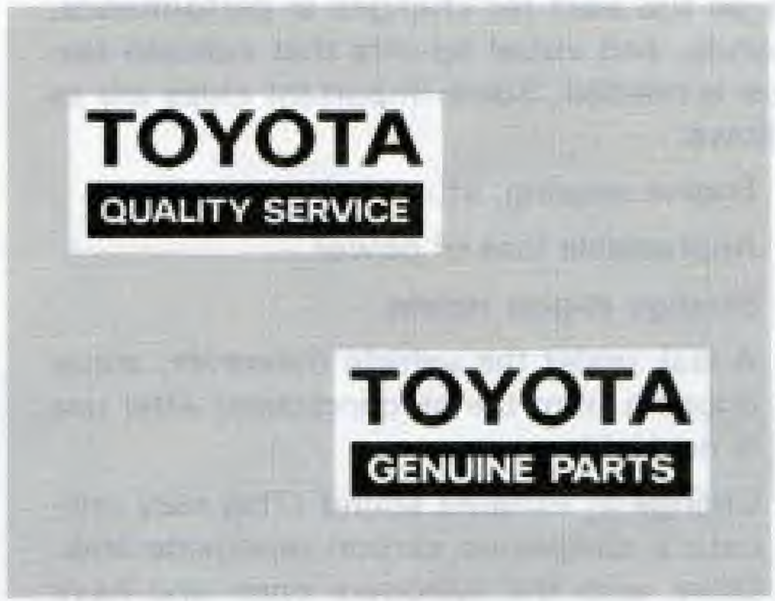

Regular maintenance is essential.

We urge you to protect your new vehicle by having your Toyota serviced according to the maintenance schedule given in the separate booklet. Regular maintenance will aid:

- Good fuel economy
- Long vehicle life
- Driving enjoyment
- Safety
- Reliability
- Warranty coverage
- Compliance with government regulations

Your Toyota has been designed for economical driving and economical maintenance. Many formerly required maintenance items are no longer required or are not required as often. To make sure that your vehicle runs at peak efficiency, follow the maintenance schedule.

For full details of your maintenance scehdule, read the separate "Toyota Service Booklet" or "Toyota Warranty Booklet".

Where to go for service?

It makes good sense to take your vehicle to your local Toyota dealer for service.

Toyota technicians are well-trained specialists. And they are receiving the latest service information through technical bulletins, service tips, and in-dealership training programs. They learn to work on Toyotas before they work on your vehicle, rather than while they are working on it. Doesn't that seem like the best way?

Your Toyota dealer has invested a lot of money in special Toyota tools and service equipment. It helps do the job better and at less cost.

Your Toyota dealer's service department will perform all of the scheduled maintenance on your vehicle—reliably and economically.

What about do-it-yourself maintenance?

Many of the maintenance items are easy to do yourself if you have a little mechanical ability and a few basic automotive tools. Simple instructions for how to perform them are presented in Part 7.

Note, however, that some maintenance tasks require special tools and skills. These are best performed by qualified technicians. Even if you are an experienced do-it-yourself mechanic, we recommend that repairs and maintenance be conducted by your Toyota dealer who will keep a record of maintenance on your Toyota. This record could be helpful should you ever require Warranty Service.

The service interval for scheduled maintenance is determined by the odometer reading or time interval, whichever comes first, shown in the schedule.

Rubber hoses (for cooling and heater system, brake system and fuel system) should be inspected by a qualified technician in accordance with the Toyota maintenance schedule.

They are particularly important maintenance items. Have any deteriorated or damaged hoses replaced immediately. Note that rubber hoses will deteriorate with age, resulting in swelled, chafed or cracked condition.

Does your vehicle need repairing?

Be on the alert for changes in performance, sounds, and visual tip-offs that indicate service is needed. Some important clues are as follows:

- Engine missing, stumbling, or pinging
- Appreciable loss of power
- Strange engine noises
- A leak under the vehicle (however, water dripping from the air conditioner after use is normal.)
- Change in exhaust sound (This may indicate a dangerous carbon monoxide leak. Drive with the windows open and have the exhaust system checked immediately.)
- Flat-looking tire; excessive tire squeal when cornering; uneven tire wear
- Vehicle pulls to one side when driving straight on a level road
- Strange noises related to suspension movement
- Loss of brake effectiveness; spongy feeling brake or clutch pedal; pedal almost touches floor; vehicle pulls to one side when braking
- Engine temperature continually higher than normal
- Engine continually runs hot; oil pressure gauge stays low

If you notice any of these clues, take your vehicle to your Toyota dealer as soon as possible. It probably needs adjustment or repair.

CAUTION:

Do not continue driving with the vehicle unchecked. It could result in serious vehicle damage and possibly personal injury.

Part 7
DO-IT-YOURSELF MAINTENANCE—

Chapter 7-1
Introduction

- Engine compartment overview
- Do-it-yourself service precautions

Engine compartment overview (2L-T engine)

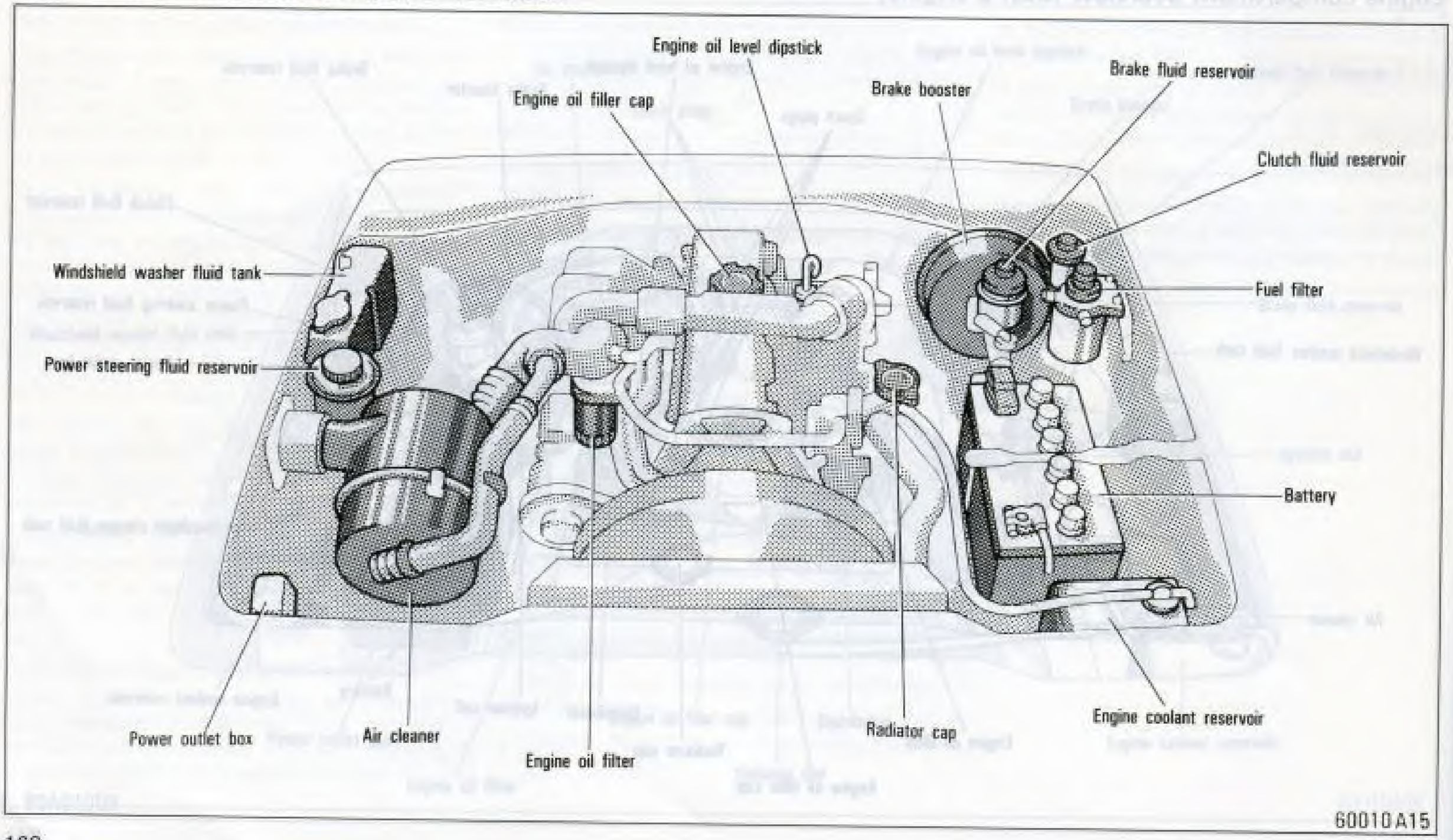

Engine compartment overview (1PZ and 1HZ engines)

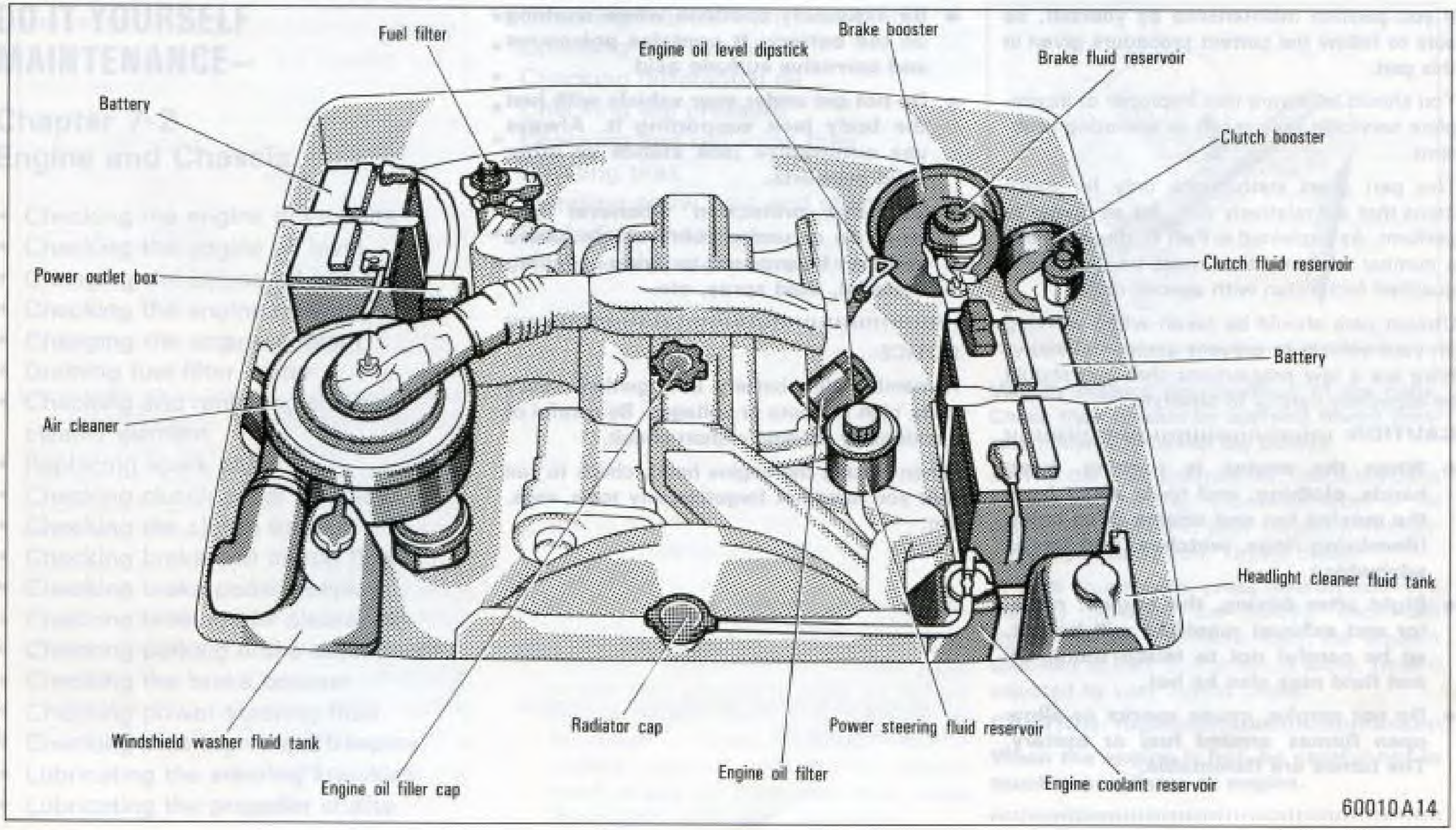

Do-it-yourself service precautions

If you perform maintenance by yourself, be sure to follow the correct procedure given in this part.

You should be aware that improper or incomplete servicing may result in operating problems.

This part gives instructions only for those items that are relatively easy for an owner to perform. As explained in Part 6, there are still a number of items that must be done by a qualified technician with special tools.

Utmost care should be taken when working on your vehicle to prevent accidental injury. Here are a few precautions that you should be especially careful to observe:

CAUTION:

- **When the engine is running, keep hands, clothing, and tools away from the moving fan and engine drive belts. (Removing rings, watches, and ties is advisable.)**
- **Right after driving, the engine, radiator and exhaust manifold will be hot, so be careful not to touch them. Oil and fluid may also be hot.**
- **Do not smoke, cause sparks or allow open flames around fuel or battery. The fumes are flammable.**
- **Be extremely cautious when working on the battery. It contains poisonous and corrosive sulfuric acid.**
- **Do not get under your vehicle with just the body jack supporting it. Always use automotive jack stands or other solid supports.**
- **Use eye protection whenever you work on or under your vehicle where you may be exposed to flying or falling material, fluid spray, etc.**

NOTICE:

Remember that battery and ignition cables carry high currents or voltages. Be careful of accidentally causing a short circuit.

When closing the engine hood, check to see that you have not forgotten any tools, rags, etc.

Part 7
DO-IT-YOURSELF MAINTENANCE—

Chapter 7-2
Engine and Chassis

- Checking the engine drive belts
- Checking the engine oil level
- Changing the engine oil and filter
- Checking the engine coolant level
- Changing the engine coolant
- Draining fuel filter water
- Checking and replacing the air cleaner element
- Replacing spark plugs
- Checking clutch pedal freeplay
- Checking the clutch booster
- Checking brake and clutch fluid
- Checking brake pedal freeplay
- Checking brake pedal clearance
- Checking parking brake adjustment
- Checking the brake booster
- Checking power steering fluid
- Checking steering wheel freeplay
- Lubricating the steering knuckles
- Lubricating the propeller shafts
- Checking manual transmission oil
- Checking transfer oil
- Checking differential oil
- Checking tire pressure
- Checking and replacing tires
- Rotating tires
- Installing snow tires and chains
- Replacing wheels
- Aluminum wheel precautions

Checking the engine drive belts

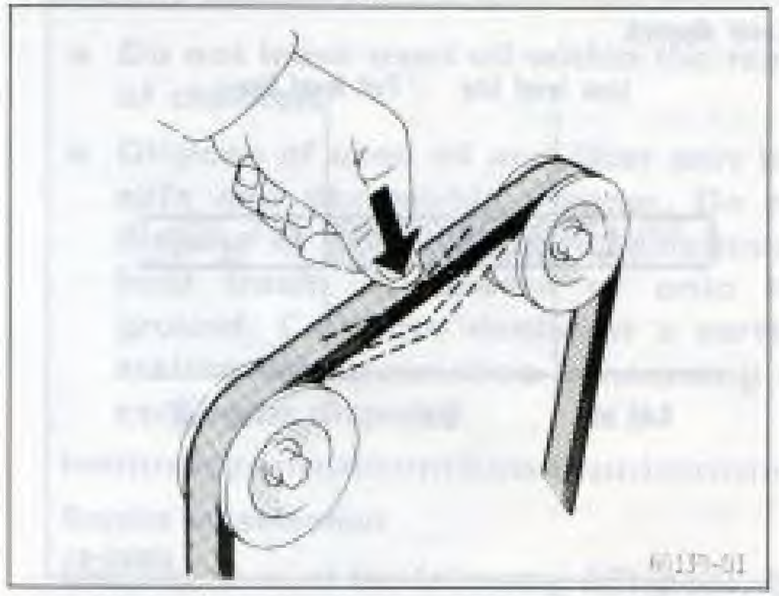

Visually inspect the condition of the belts. Check their tension by applying thumb pressure midway between the pulleys.

a. With the engine turned off, check the belts for cracks, fraying, excessive wear or oil stains. Have belts in poor condition immediately replaced by your Toyota dealer.

b. With your thumb, press hard on each belt midway between the pulleys. Each belt should deflect no more than the amount specified in Part 8. If a belt is loose, have it adjusted by your Toyota dealer.

CAUTION:

When the engine is hot, be careful not to touch the radiator or engine.

Checking the engine oil level

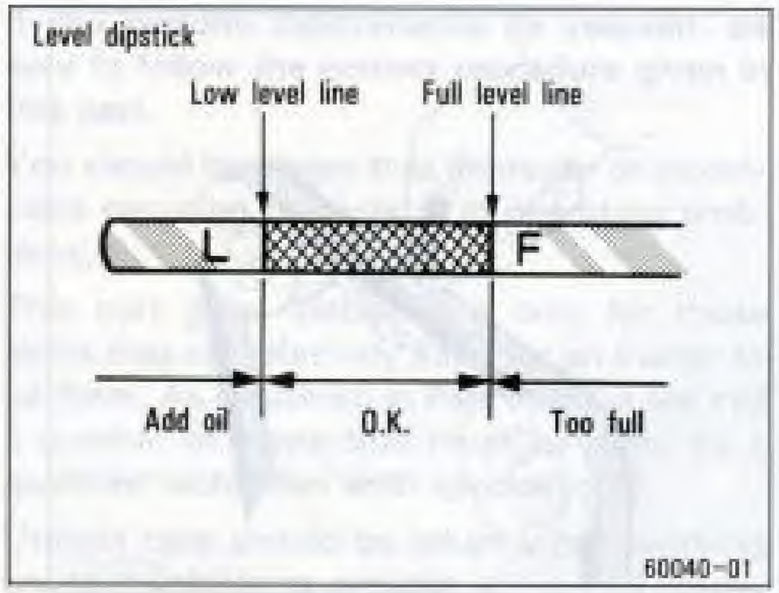

With the engine at operating temperature and turned off, check the oil level on the dipstick.

1. To get a true reading, the vehicle should be on a level spot. After turning off the engine, wait a few minutes for the oil to drain back into the bottom of the engine.

2. Pull out the dipstick, and wipe it clean with a rag.

3. Reinsert the dipstick—push it in as far as it will go, or the reading will not be correct.

4. Pull the dipstick out and look at the oil level on the end.

CAUTION:

Be careful not to touch the hot exhaust manifold.

If the oil level is below or only slightly above the low level line, add engine oil of the same type as already in the engine.

Remove the oil filler cap and add engine oil in small quantities at a time, checking the dipstick.

The approximate quantity of oil needed to fill between the low level line and the full level line on the dipstick is indicated below for reference.

When the level reaches within the correct range, install the filler cap hand-tight.

Oil quantity, L (qt., Imp. qt.):

22R and 22R-E engines	1.0 (1.1, 0.9)
2L-T, 1PZ and 1HZ engines	1.5 (1.6, 1.3)

NOTICE:

Avoid overfilling, or the engine could be damaged.

Check the oil level on the dipstick once again after adding the oil.

Changing the engine oil and filter

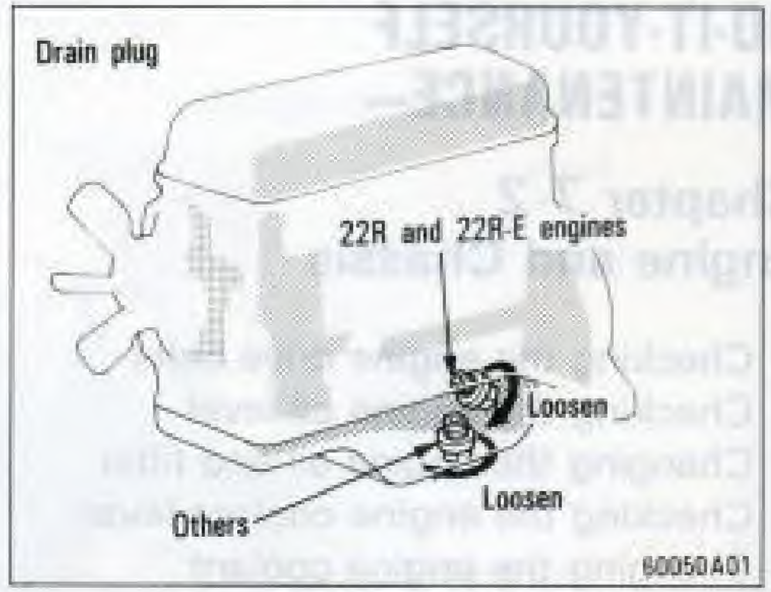

1. Warm up the engine for a few minutes and then turn it off. Remove the oil filler cap.

a. Park the vehicle on a level spot. Warm up the engine until the engine temperature gauge shows a rise. (Warm oil will drain faster and more thoroughly.) Turn the engine off.

b. Remove the oil filler cap. This allows air to enter the engine as the oil drains.

2. Remove the drain plug and allow the oil to drain fully.

a. Place a drain pan under the drain plug.

b. Using a wrench, remove the drain plug. Allow the oil to drain fully.

CAUTION:

The oil may be hot—be careful not to burn yourself.

3. Remove the old oil filter and install a new one. Reinstall the drain plug.

a. Using an oil filter wrench (any of several common types will work), loosen the oil filter. It turns counterclockwise. Once loose, you may unscrew it the rest of the way by hand. When removing it, hold up the end so that oil does not spill out.

b. With a clean rag, wipe off the mounting surface on the engine so that the new filter will seat well. Make sure that the old gasket has not stuck to the mounting surface. If it has, remove it before installing the new filter.

c. Smear a little engine oil on the rubber gasket of the new oil filter.

d. Screw the new filter into place and tighten it until the gasket contacts the seat. Then give it an additional 3/4 turn to seat the filter with the oil filter wrench.

e. Reinstall the drain plug and a new gasket. Tighten the plug with your wrench, but do not force it and strip the threads.

CAUTION:

Be careful not to touch the hot exhaust manifold.

4. Add oil and install the filler cap. Start the engine and check for leaks at the filter or drain plug.

a. See the following "Engine oil selection" for proper engine oil selection. Engine oil additives are neither needed nor recommended.

b. After adding the oil, make sure that the filler cap is installed hand-tight. You should double-check the oil level on the dipstick.

c. With the engine running, look carefully for any small leaks from around the oil filter or drain plug. Any leak indicates a faulty installation.

d. Turn the engine off and wait a few minutes. Check the oil level again and add oil if necessary.

CAUTION:

- **Used engine oil contains potentially harmful contaminants which may cause skin disorders such as inflammation or skin cancer, so care should be taken to avoid prolonged and repeated contact with it. To remove used engine oil from your skin, wash thoroughly with soap and water.**
- **Do not leave used oil within the reach of children.**
- **Dispose of used oil and filter only in a safe and acceptable manner. Do not dispose of used oil and filter in household trash, in sewers or onto the ground. Call your dealer or a service station for information concerning recycling or disposal.**

Engine oil selection

Use engine oil of the following API grade. Determine the viscosity for your climate. Recommended viscosity is given in the chart below.

Gasoline engine SG or better
(If it is impossible to get SG or better grade, you may use SF grade.)

Diesel engine CD or better

Recommended viscosity (SAE):

GASOLINE ENGINE

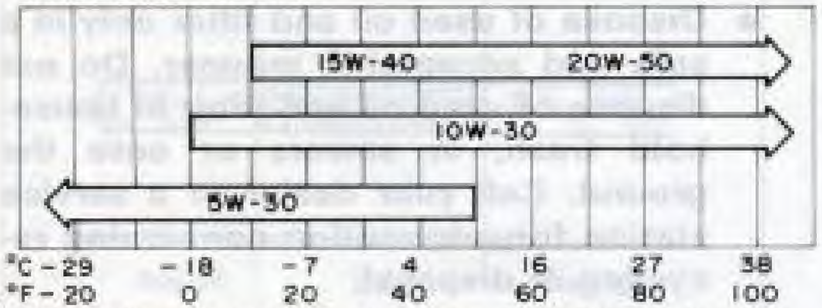

Temperature range anticipated before next oil change

60040-12E

DIESEL ENGINE

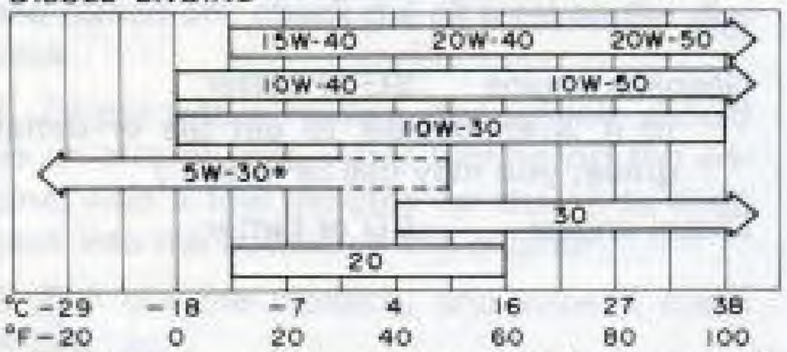

Temperature range anticipated before next oil change

*: On turbocharged engines, never use above 0°C (32°F).

60040-10E

Checking the engine coolant level

Look at the see-through coolant reservoir tank. The coolant level is satisfactory if it is between the "FULL" and "LOW" lines on the tank. If the level is low, add coolant of the same type as already in the system.

The coolant level in the reservoir tank will vary with engine temperature. However, if the level is on or below the "LOW" line, add coolant. Bring the level up to the "FULL" line.

Always use the same type of coolant as already in the cooling system. For information on coolant, see also "Changing the engine coolant".

If the coolant level drops within a short time after replenishing, there may be a leak in the system. Visually check the radiator, hoses, radiator cap and drain cock and water pump.

If no leak can be found, have the cap pressure tested at your Toyota dealer.

CAUTION:

To prevent burning yourself, do not remove the radiator cap when the engine is hot.

Changing the engine coolant

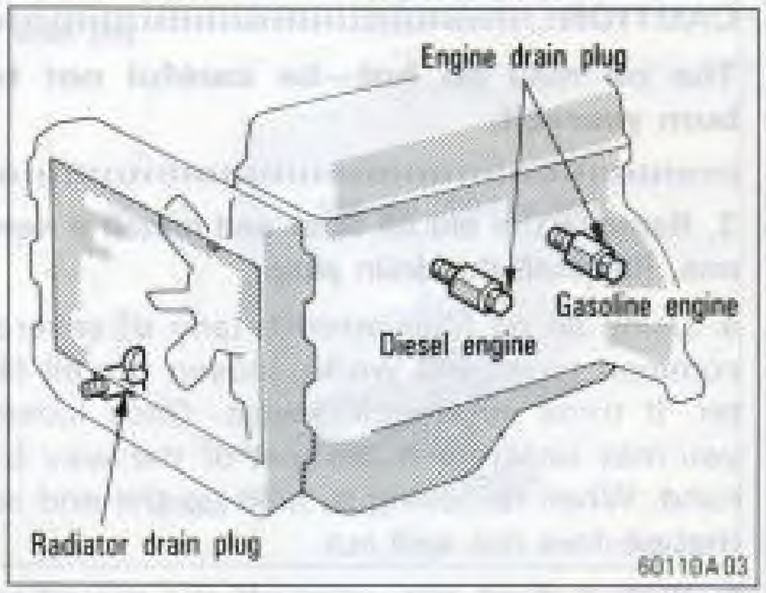

1. Drain the cooling system and flush it out with water.

a. Park the vehicle on a level spot, where the coolant can drain into a suitable disposal container.

b. Remove the radiator cap and loosen (turn counterclockwise) the drain plugs.

CAUTION:

To prevent burning yourself, do not remove the radiator cap or loosen the drain plugs if the engine is hot.

2. Close the drain plugs and fill the system with coolant. Install the radiator cap.

a. Make sure that the drain plugs are securely tightened.

b. Pour the proper amount of antifreeze or anticorrosive into the radiator. Then fill with clean demineralized or distilled water until the radiator is full.

NOTICE:

Add only demineralized or distilled water to fill the radiator.

c. Wait for a few minutes and add water again in small quantities until the water level does not drop.

d. Start the engine, and top up the radiator with water. Fill the reservoir half full.

e. Install the radiator and reservoir caps and double-check that the drain plugs are not leaking.

NOTICE:

If you spill some of the coolant, be sure to wash it off with water to prevent it from damaging the parts or painting.

Coolant type selection

Your coolant must contain either ethylene-glycol antifreeze or anticorrosive.

Ethylene-glycol antifreeze is the antifreeze contained in the coolant your new Toyota is delivered with. In addition to preventing freezing and subsequent damage to the engine, this will prevent corrosion.

Anticorrosive may be used only in regions where there is no possibility of the coolant freezing. Use Toyota "RADIATOR CONDITIONER" anticorrosive or equivalent.

Read the antifreeze or anticorrosive container for information on freeze and corrosion protection. Follow the manufacturer's directions for how much to mix with water. The total capacity of the cooling system is given in Part 8. As for antifreeze, we recommend 50 % solution be used for your Toyota, or a sufficient quantity to provide protection to about −35°C (−31°F).

NOTICE:

Do not use alcohol type antifreeze or plain water alone.

Draining fuel filter water (diesel engine)

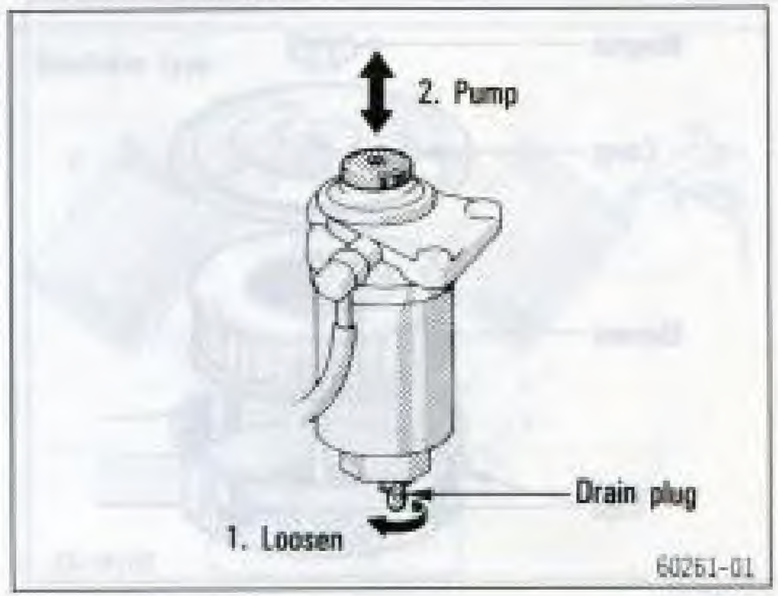

When the fuel filter warning light comes on, the water in the fuel filter must be drained immediately.

a. Place a small tray under the drain plug to catch the water.

b. Turn the drain plug counterclockwise about 2−2-1/2 turns. (Loosening more than this will cause water oozing from around the drain plug.)

c. Operate the priming pump until fuel begins to run out.

d. Retighten the drain plug. Do not use a tool.

Checking and replacing the air cleaner element (type A)

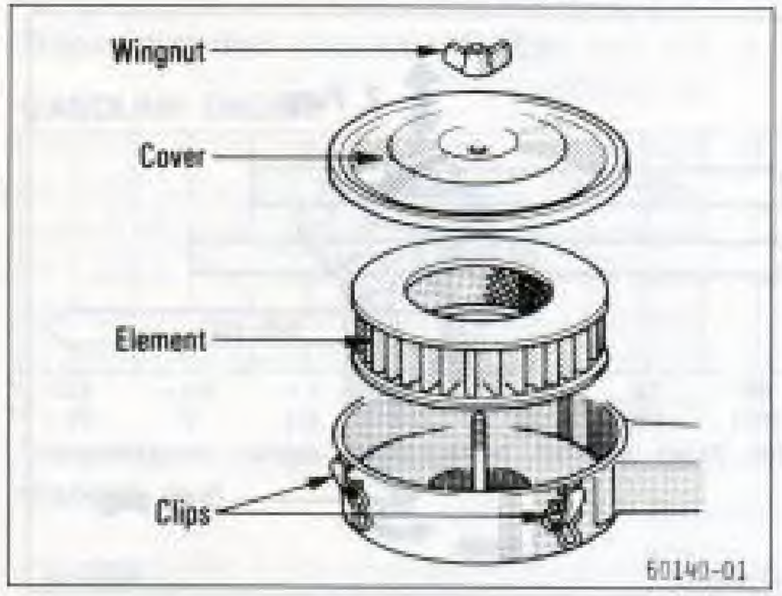

1. To inspect the element, unscrew the wingnut and release the clips. Then remove the cover and take out the element.

The wingnut can be unscrewed by hand.

Inspect the outer surface of the element. If it is dirty, it should be replaced. If it is just moderately dusty, it may be cleaned by blowing compressed air from the inside. Do not wash or oil the element.

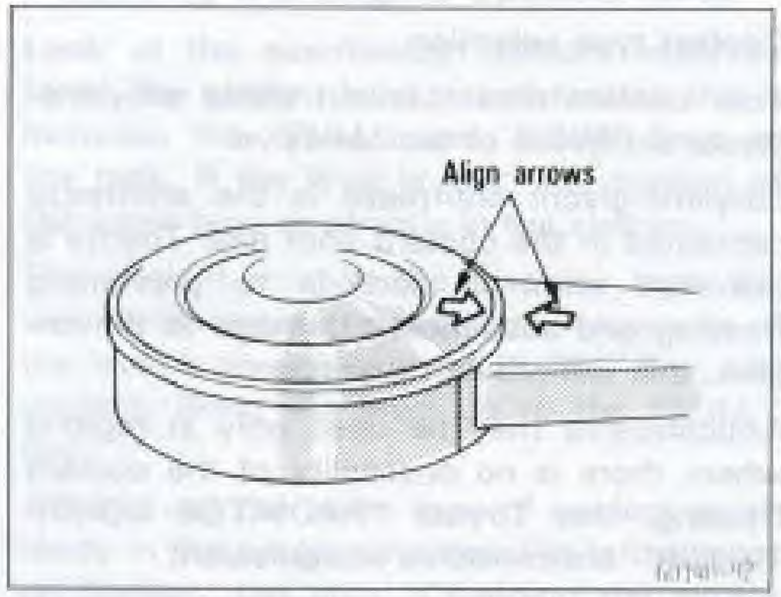

2. To install an element, put it properly in place and reinstall the cover with the arrows on the cover and case aligned.

Before installing, remove any dust from where the element seats.

NOTICE:

Do not overtighten the wingnut, or the carburetor may be damaged.

Do not drive with the air cleaner removed, or excessive engine wear could result. Also backfiring could cause a fire in the engine compartment.

Checking and replacing the air cleaner element (type B)

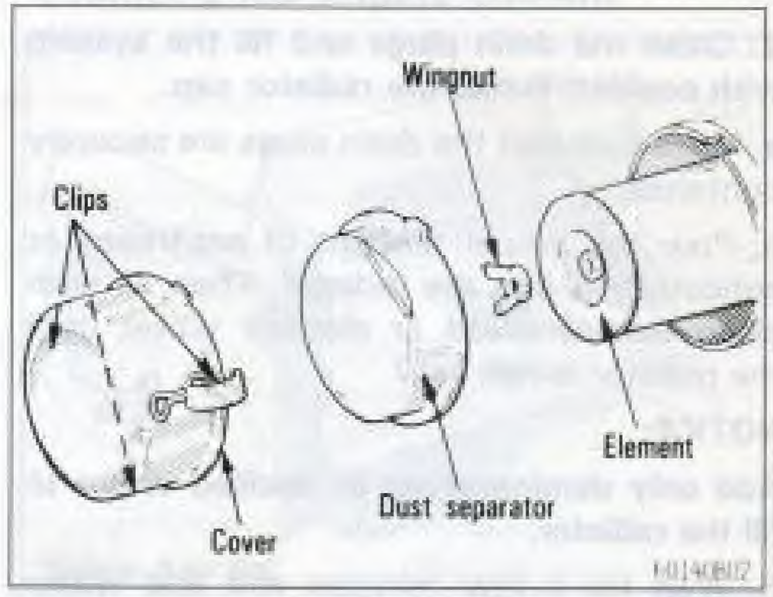

CHECKING AND REPLACING

1. To inspect the element, release the clips, and remove the cover and dust separator. Then unscrew the wingnut and take out the element.

The wingnut can be unscrewed by hand.

Inspect the outer surface of the element. If it is dirty, it should be replaced. If it is just moderately dusty, it may be cleaned as described in "CLEANING".

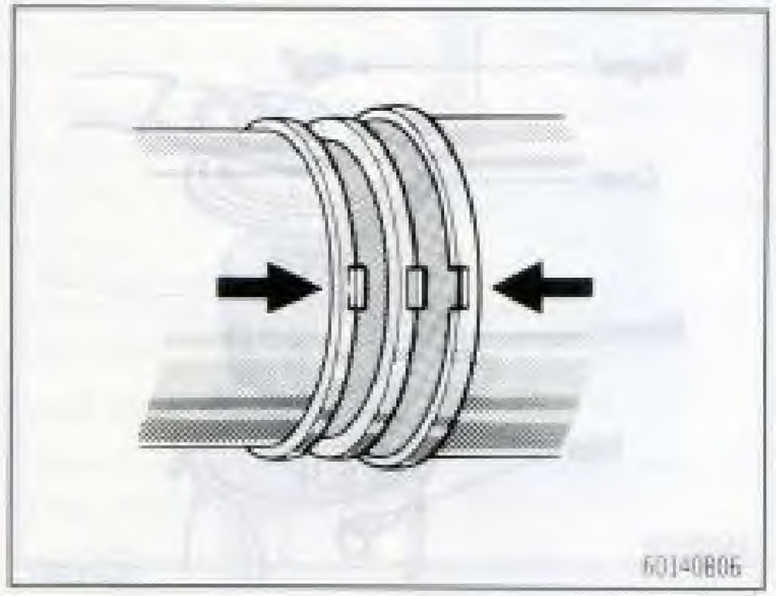

2. To install an element, put it properly in place and tighten the wingnut. Then reinstall the cover with the tabs on the dust separator and cover fitted in the cutout on the case.

NOTICE:

Do not drive with the air cleaner removed, or excessive engine wear could result. Also backfiring could cause a fire in the engine compartment.

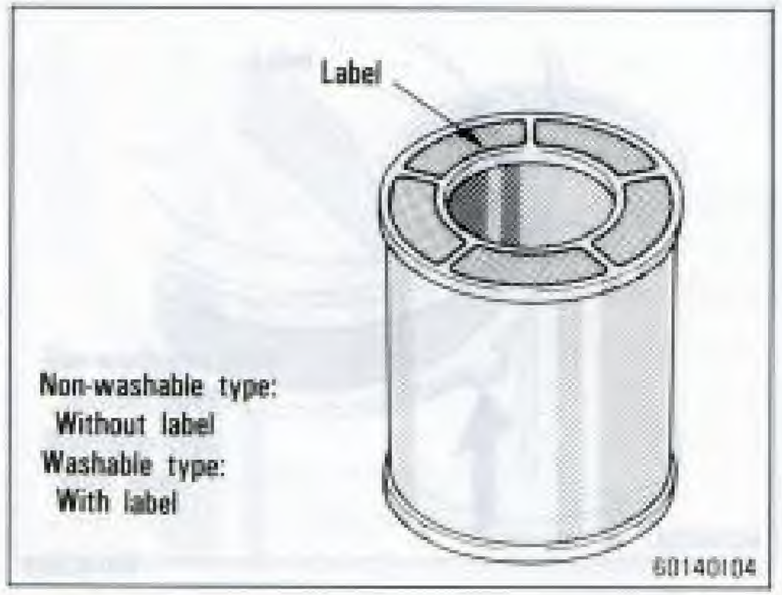

CLEANING

If the element is just moderately dusty, clean it as follows.

If you are unsure whether your element is non-washable or washable type, see the illustration.

Non-washable type—

Clean the element by blowing compressed air from the inside. Do not wash or oil the element.

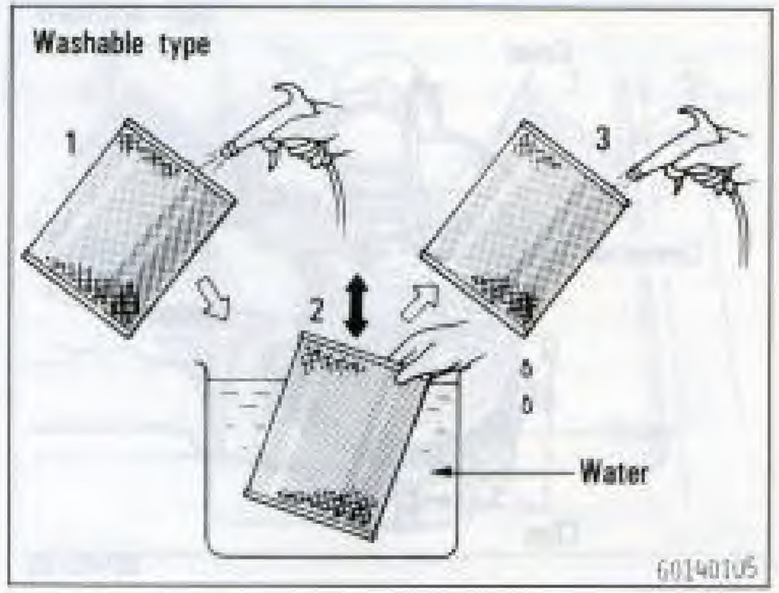

Washable type—

a. Prepare a suitable container and fill it with water.

b. Blow out dust in the element with compressed air from the inside.

c. Submerge the element in the water and move it up and down ten or more times.

d. Empty the container and refill it with clean water.

e. Repeat steps c. and d. until water is clear.

f. Remove excess water by shaking the element or with compressed air. Do not beat or drop the element.

Checking and replacing the air cleaner element (type C)

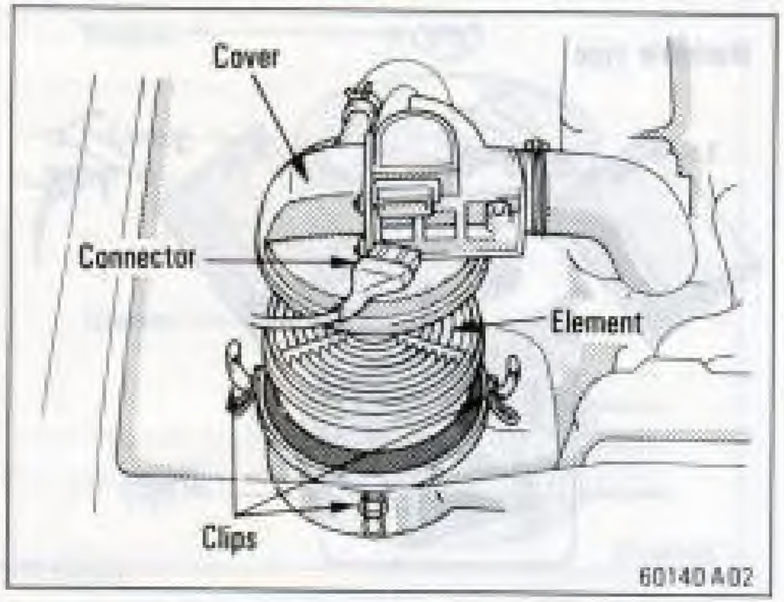

1. To inspect the element, pull off the connector and release the clips. Then remove the cover and take out the element.

Inspect the outer surface of the element. If it is dirty, it should be replaced. If it is just moderately dusty, it may be cleaned by blowing compressed air from the upper surface. Do not wash or oil the element.

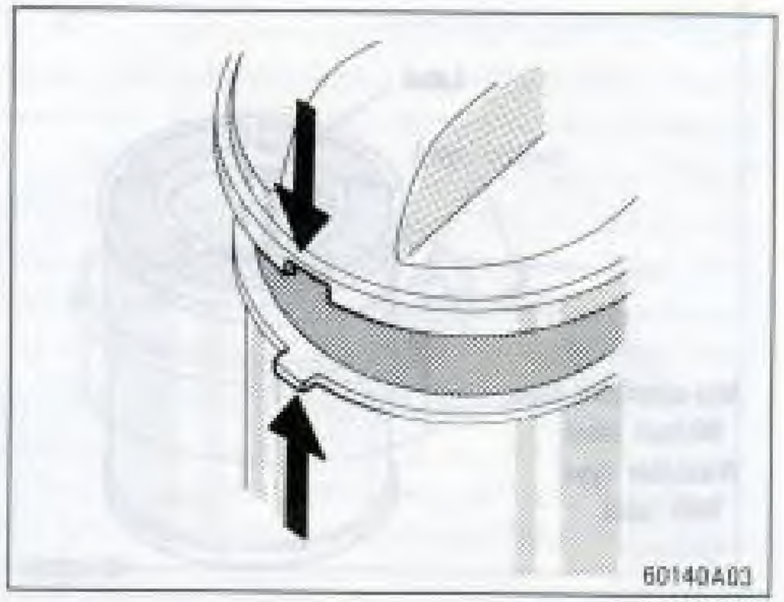

2. To install an element, put it properly in place and reinstall the cover with the tab fitted in the cutout provided.

Before installing, remove any dust from where the element seats.

NOTICE:

Do not drive with the air cleaner removed, or excessive engine wear could result. Also backfiring could cause a fire in the engine compartment.

Checking and replacing the air cleaner element (type D)

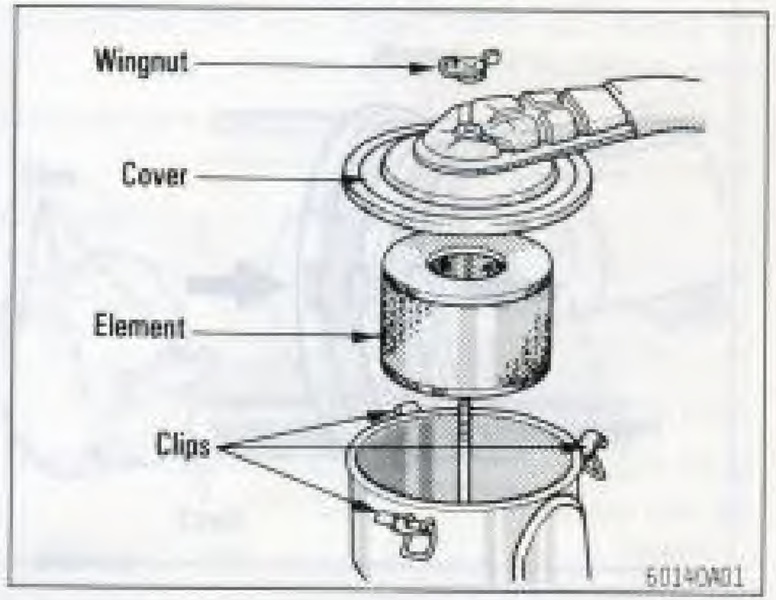

CHECKING AND REPLACING

1. To inspect the element, unscrew the wingnut and release the clips. Then remove the cover and take out the element.

The wingnut can be unscrewed by hand.

Inspect the outer surface of the element. If it is dirty, it should be replaced. If it is just moderately dusty, it may be cleaned as described in "CLEANING".

When installing an element, be sure to remove any dust from where the element seats and put the element properly in place.

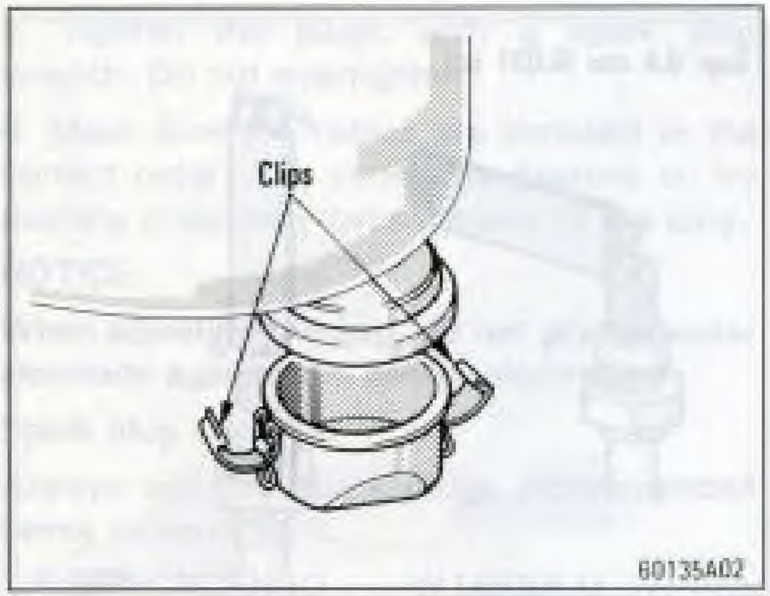

Do not overtighten the wingnut.

NOTICE:

Do not drive with the air cleaner removed, or excessive engine wear could result. Also backfiring could cause a fire in the engine compartment.

2. With dust cup: To check the dust cup, release the clips.

Check the dust cup for any dirts. Empty the cup as required.

To reinstall the dust cup, align the tab on the dust cup with the cutout of the dust cup seat and fasten the clips.

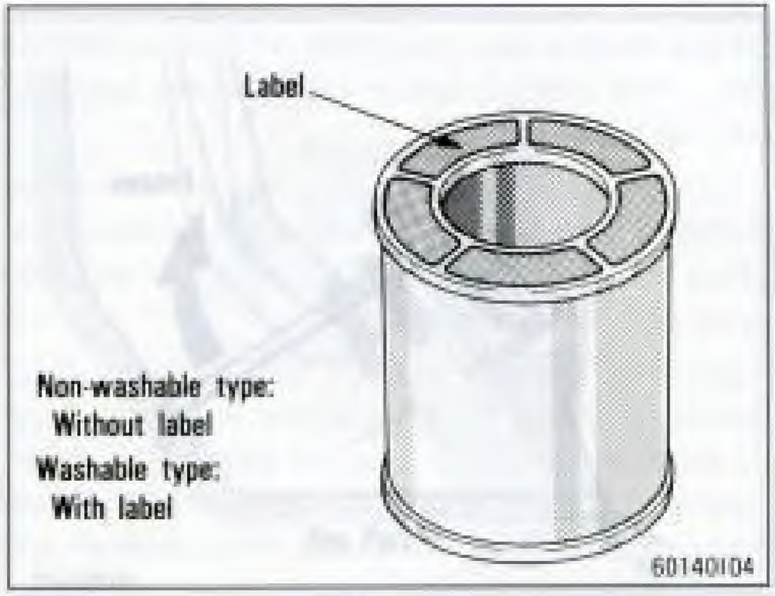

CLEANING

If the element is just moderately dusty, clean it as follows.

If you are unsure whether your element is non-washable or washable type, see the illustration.

Non-washable type—

Clean the element by blowing compressed air from the inside. Do not wash or oil the element.

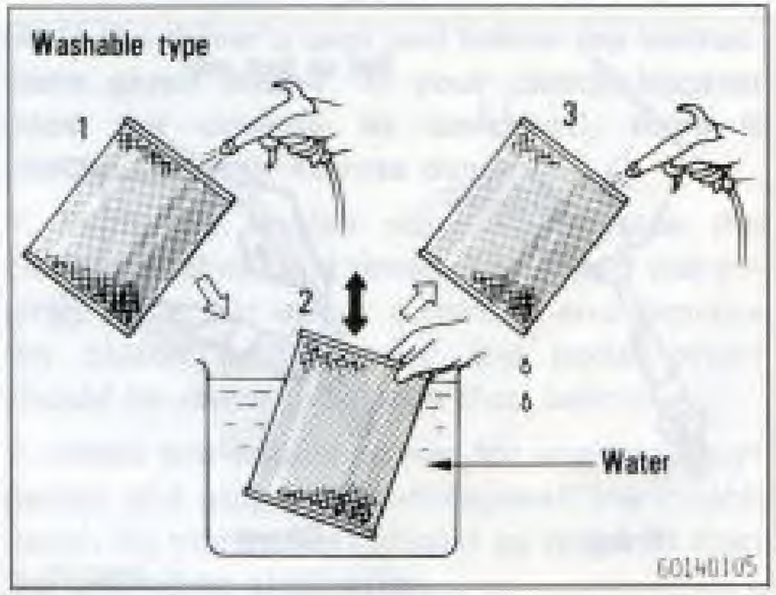

Washable type—

a. Prepare a suitable container and fill it with water.

b. Blow out dust in the element with compressed air from the inside.

c. Submerge the element in the water and move it up and down ten or more times.

d. Empty the container and refill it with clean water.

e. Repeat steps c. and d. until water is clear.

f. Remove excess water by shaking the element or with compressed air. Do not beat or drop the element.

Replacing spark plugs

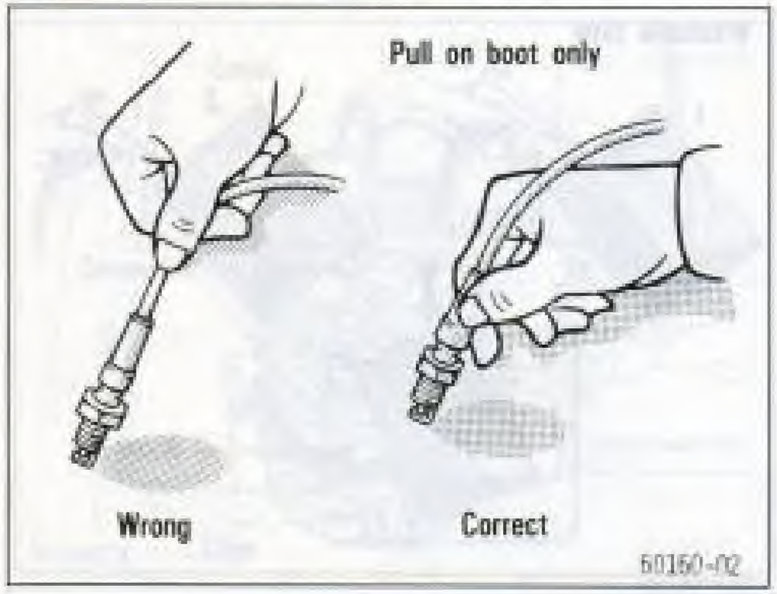

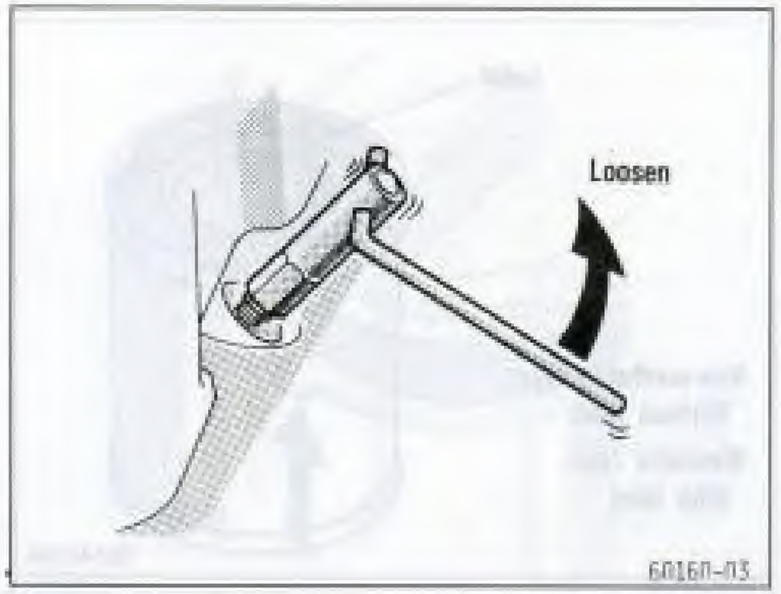

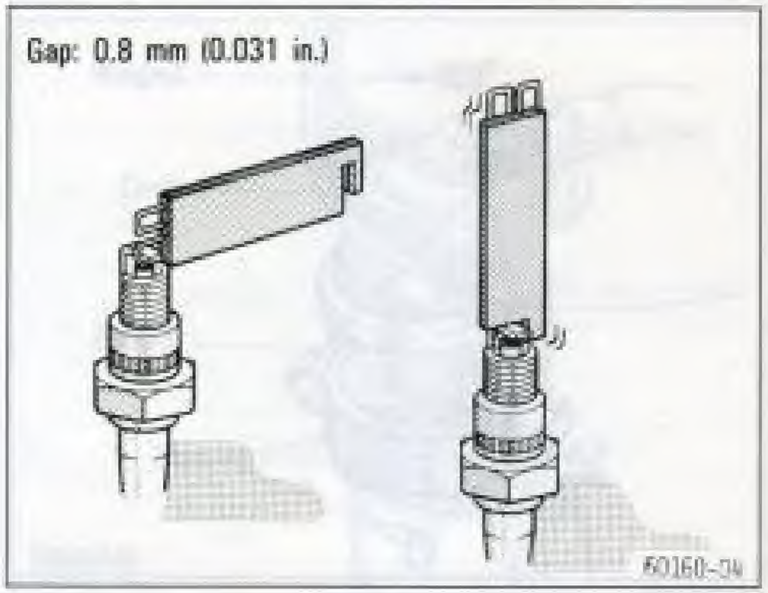

1. Unfasten the spark plug cables by pulling on the boot, not on the cable itself.

a. Note the order of the spark plug cables. If you are not positive that you can reconnect them correctly, mark each cable with a number on a piece of tape before disconnecting it.

b. Unfasten the connector by pulling straight up. Pulling on the cables may break the carbon conductor inside.

CAUTION:

The boots may be hot, so be careful.

2. Unscrew the old spark plugs with a spark plug wrench and remove them.

CAUTION:

The spark plugs may be hot, so be careful.

NOTICE:

Do not allow dirt or anything else to fall through the spark plug holes.

3. Set the gap on the new plugs to the correct clearance, and install them. Reconnect the spark plug cables in the correct order.

a. Check the gap by passing the feeler gauge between the electrodes on the spark plug. If the gap is correct, you will feel a slight drag. If necessary, bend the outer electrode to obtain the right clearance.

b. Screw in the plugs by hand as far as it will go. If necessary, a spark plug wrench may be used for an extension. If a plug does not screw in smoothly, remove it and try again to ensure the correct engagement of the threads on the spark plug with the threads in the hole. This prevents the threads from stripping in the next step.

c. Tighten the plugs with a spark plug wrench. Do not overtighten.

d. Make sure the cables are installed in the correct order. The connector fastens on by pushing it squarely over the end of the plug.

NOTICE:

When adjusting the gap, do not pry the outer electrode against the center electrode.

Spark plug selection

Always use the spark plugs recommended below or equivalent.

NIPPONDENSO	W16EXR-U
NGK	BPR5EY

NOTICE:

Use only the spark plugs of the type specified above. Using other types will cause engine damage, loss of performance or radio noises.

Checking clutch pedal freeplay

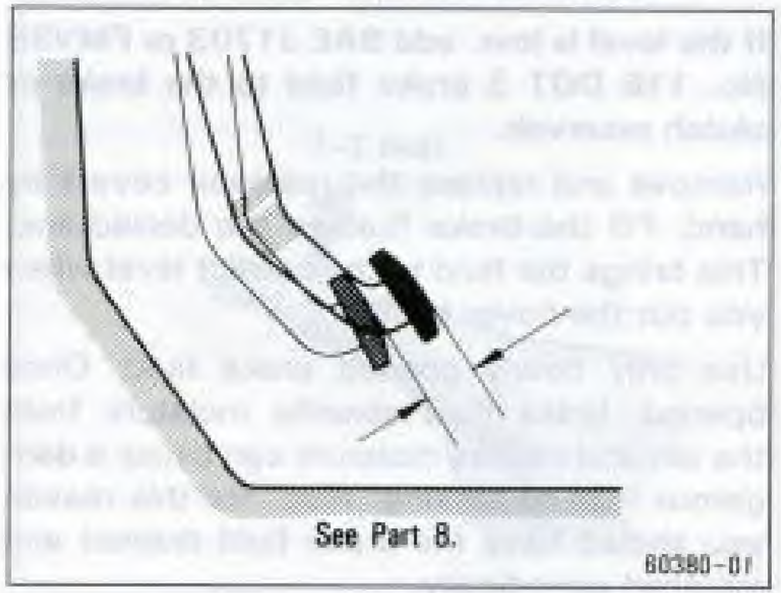

With the engine stopped, first reduce the vacuum in the booster by depressing the clutch pedal several times (this is not necessary if your vehicle does not have a booster). Then press down lightly on the clutch pedal and measure the distance it moves freely before the clutch resistance is felt. The freeplay should be within the limits specified in Part 8.

If the freeplay is more or less, have your Toyota dealer inspect the clutch.

Checking the clutch booster

Sit in the driver's seat and follow the instructions given below. If your clutch booster does not operate as described, have it checked at your Toyota dealer.

1. With the engine stopped, depress the clutch pedal several times. Then start the engine, run it for about a minute and depress the clutch pedal again: the pedal effort should be remarkably less than before.

2. Allow the engine to run for another short period and stop it. Then depress the clutch pedal: no more effort should be required than the preceding application.

Checking brake and clutch fluid

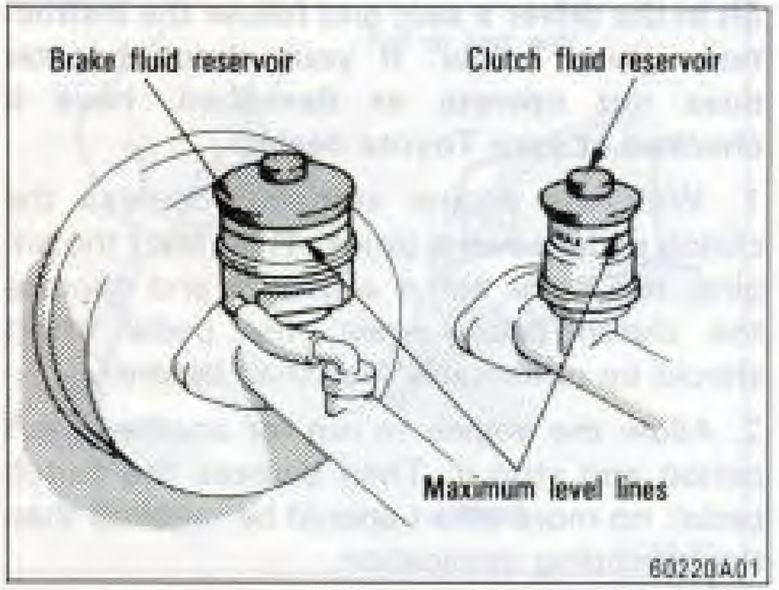

To check the fluid levels, simply look at the see-through reservoirs. The brake and clutch fluid levels should be within 10 mm (0.4 in.) and 5 mm (0.2 in.) respectively below each maximum level line.

It is a good habit to check these fluid reservoirs every time you check the engine oil level.

It is normal for the brake fluid level to go down slightly as the brake pads wear. So be sure to keep the reservoirs filled.

If any reservoir needs frequent refilling, it may indicate a serious mechanical problem.

If the level is low, add SAE J1703 or FMVSS No. 116 DOT 3 brake fluid to the brake or clutch reservoir.

Remove and replace the reservoir covers by hand. Fill the brake fluid to the dotted line. This brings the fluid to the correct level when you put the cover back on.

Use only newly opened brake fluid. Once opened, brake fluid absorbs moisture from the air, and excess moisture can cause a dangerous loss of braking. Also, for this reason you should have the brake fluid drained and replaced periodically.

CAUTION:

Use caution in filling the reservoirs because brake fluid can harm your eyes and damage painted surfaces. If fluid gets in your eyes, flush your eyes with clean water.

NOTICE:

If you spill some of the fluid, be sure to wash it off with water to prevent it from damaging the parts or painting.

Checking brake pedal freeplay

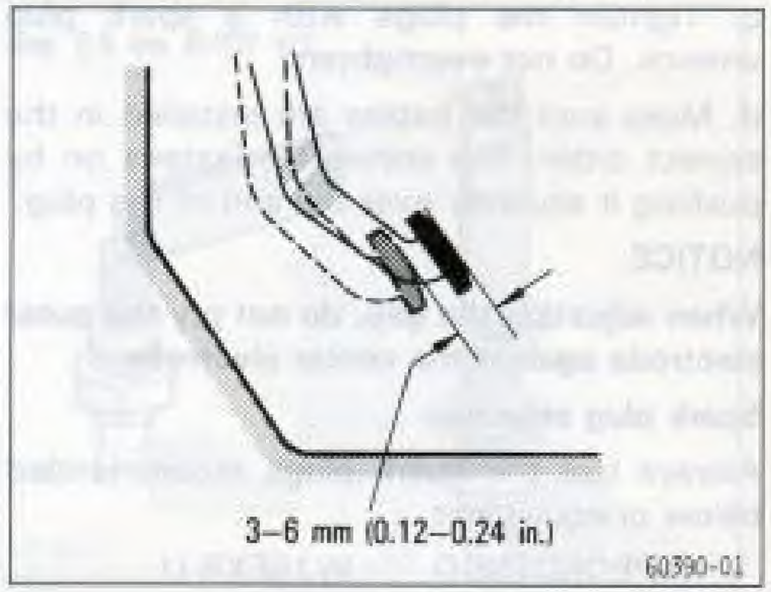

With the engine stopped, first reduce the vacuum in the booster by depressing the brake pedal several times. Then lightly and slowly press down on the pedal with your fingers and measure the distance it moves before slight resistance is felt.

If the freeplay is more or less than specification, have your Toyota dealer adjust the brakes.

Checking brake pedal clearance

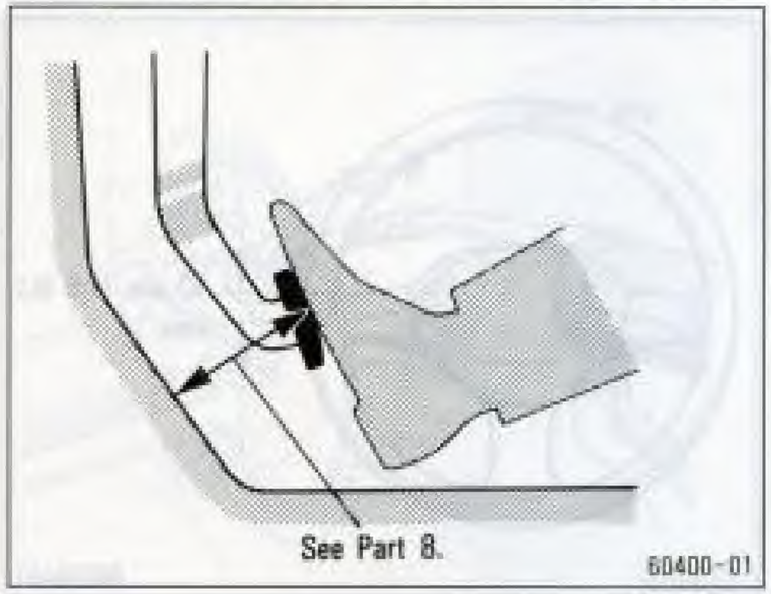

With the engine running, have someone press the brake pedal several times and then press hard (approximately 490 N [50 kgf, 110 lb.]) on it. The distance from the asphalt sheet to the top surface of the pedal should not be less than specified in Part 8.

If the clearance is less, have your Toyota dealer adjust the brakes.

Checking parking brake adjustment

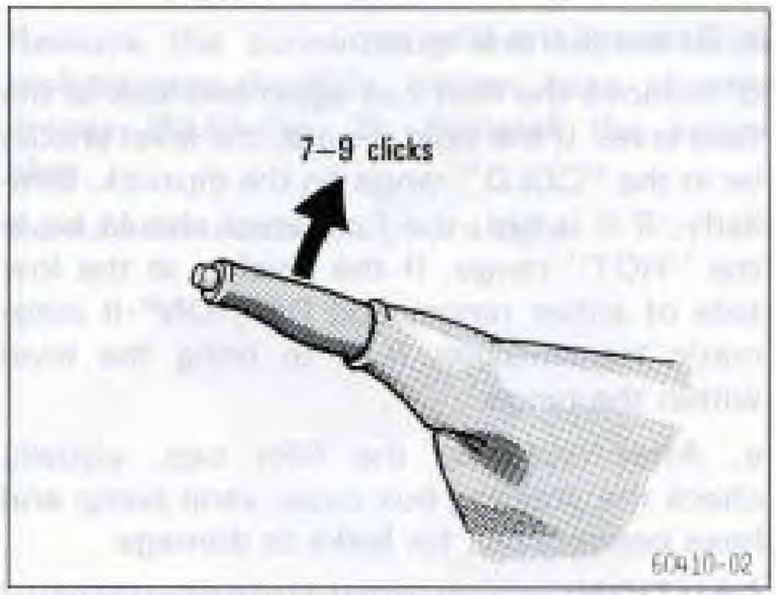

Count the number of clicks as you slowly pull on the parking brake as far as it will go (approximately 196 N [20 kgf, 44 lb.]). The adjustment is correct if you hear the number of clicks specified above.

If you count more or less clicks, have the parking brake adjusted by your Toyota dealer.

Checking the brake booster

Sit in the driver's seat and follow the instructions given below. If your brakes do not operate as described, have them checked at your Toyota dealer.

1. With the engine stopped, depress the brake pedal several times: the travel distance should not change.

2. With the brake fully depressed, start the engine: the pedal should move down a little when the engine starts.

3. Depress the brake, stop the engine, and hold the pedal in for about 30 seconds: the pedal should neither sink nor rise.

4. Restart the engine, run it for about a minute and turn it off. Then firmly depress the brake several times: the pedal travel should decrease with each application.

Checking power steering fluid

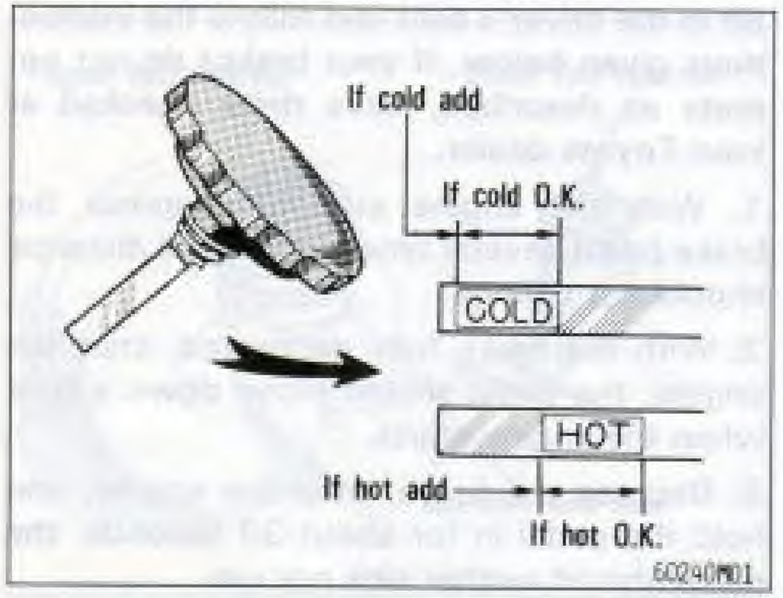

Check the fluid level on the dipstick. If necessary, add DEXRON®-II automatic transmission fluid.

If the vehicle has been driven around 80 km/h (50 mph) for 20 minutes (a little more in frigid temperatures), the fluid is hot (60°C –80°C or 140°F–175°F). You may also check the level when the fluid is cold (about room temperature, 10°C–30°C or 50°F –85°F) if the engine has not been run for about five hours.

a. Clean all dirt from outside of the reservoir tank.

b. Remove the filler cap by turning it counterclockwise and wipe the dipstick clean.

c. Reinstall the filler cap.

d. Remove the filler cap again and look at the fluid level. If the fluid is cold, the level should be in the "COLD" range on the dipstick. Similarly, if it is hot, the fluid level should be in the "HOT" range. If the level is at the low side of either range, add DEXRON®-II automatic transmission fluid to bring the level within the range.

e. After replacing the filler cap, visually check the steering box case, vane pump and hose connections for leaks or damage.

CAUTION:

The reservoir tank may be hot so be careful not to burn yourself.

NOTICE:

Avoid overfilling, or the power steering could be damaged.

Checking steering wheel freeplay

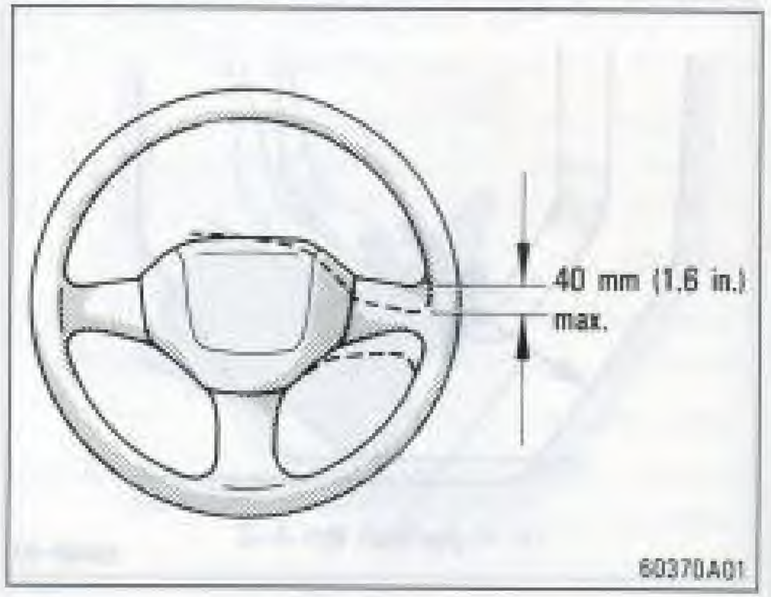

With the vehicle stopped and the front wheels pointed straight ahead, turn the steering wheel lightly both sides. If the freeplay is more than specified, have it inspected by your Toyota dealer.

Lubricating the steering knuckles

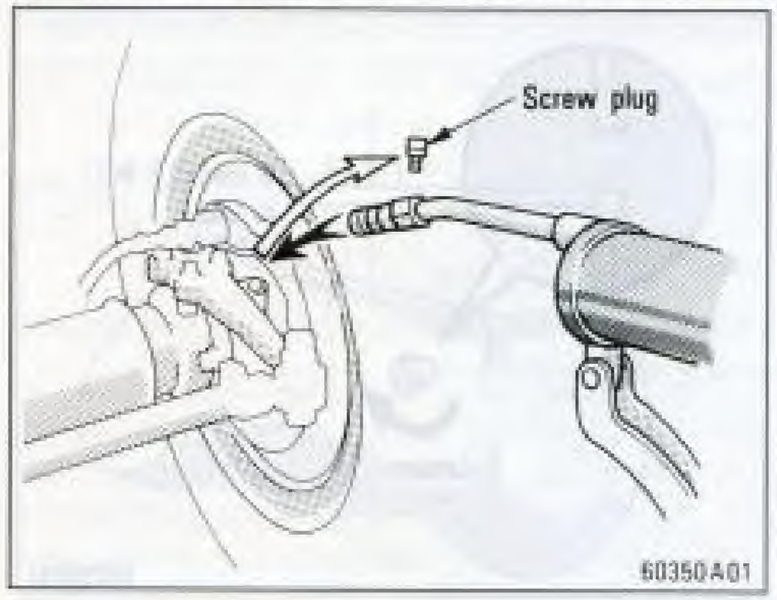

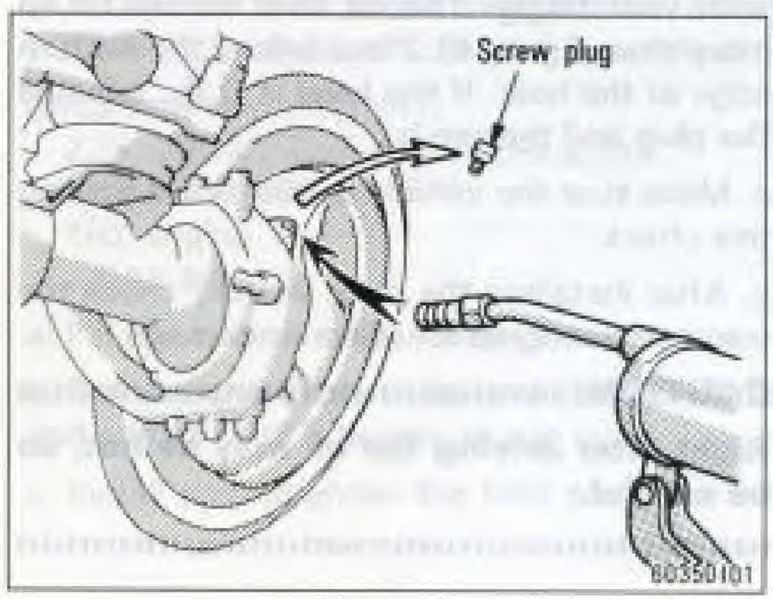

Remove the screw plug and repack with molybdenum-disulfide lithium base chassis grease (NLGI No. 2). Reinstall the screw plug.

Be sure the screw plugs are tight.

Lubricating the propeller shafts

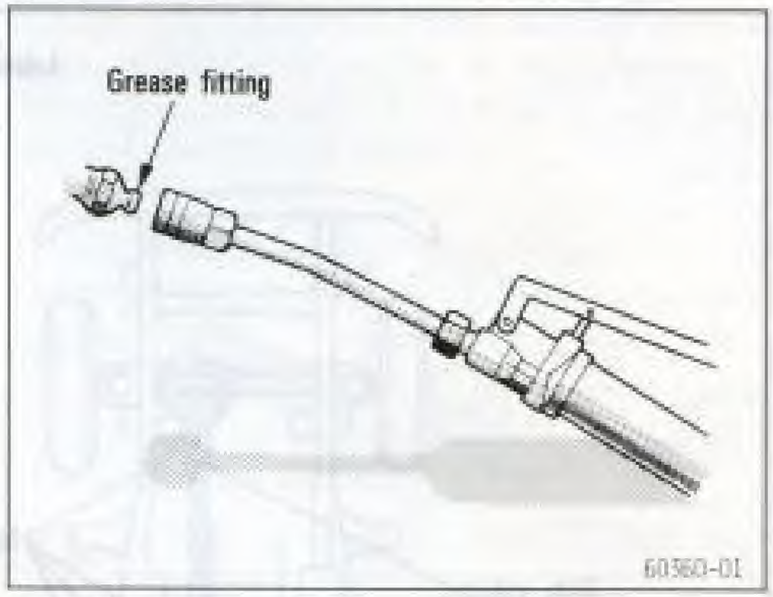

Wipe off each grease fitting. With a grease gun, pump lithium base wheel bearing grease (NLGI No. 2) into each fitting until it begins to flow from around the oil seal. Remove the grease gun.

When lubricating the front propeller shaft, rotate the shaft as shown to reach to the rear spider grease fitting.

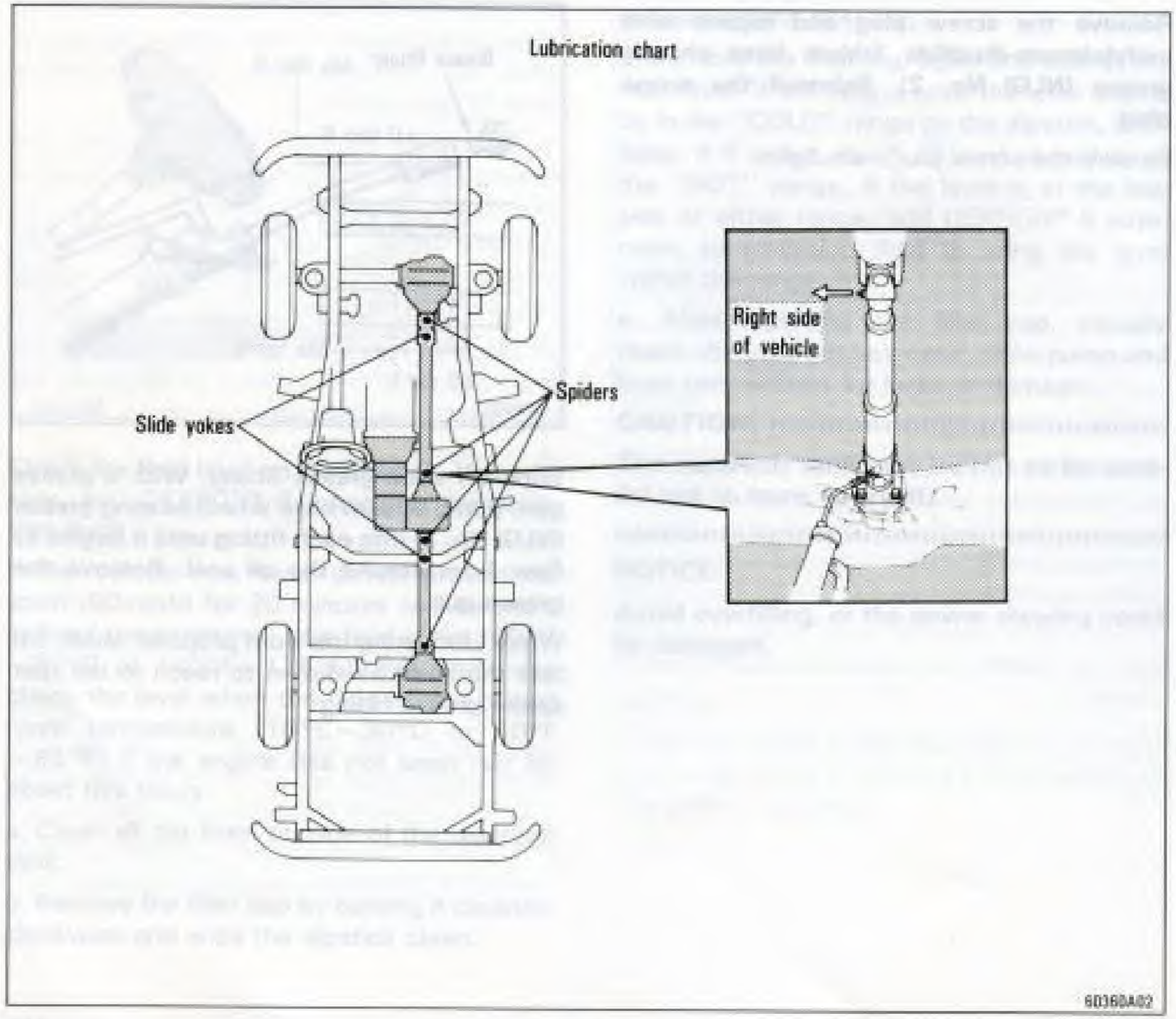

Checking manual transmission oil

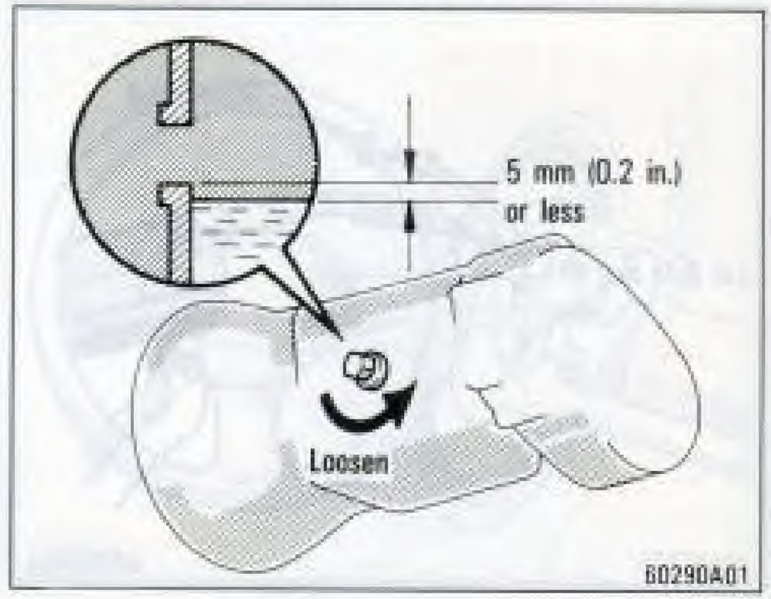

Remove the filler plug and feel inside the hole with your finger. The oil level should be no more than 5 mm (0.2 in.) below the bottom edge of the hole. If the level is O.K., reinstall the plug and tighten it.

a. Make sure the vehicle is level while making this check.

b. After installing the plug, visually check the transmission case for leaks or damage.

CAUTION:

Right after driving the oil may be hot, so be careful.

If the level is low, add multipurpose gear oil (API GL-4 or GL-5) until it begins to run out of the filler hole. Reinstall the plug securely.

Recommended viscosity:
22R, 22R-E, 2L-T and 1PZ engines
SAE 75W-90
1HZ engine
SAE 90

a. Fill the lubricant filler with gear oil.

b. Put the end of the tube into the filler hole and add oil until it begins to run out.

c. Install and retighten the filler plug.

Checking transfer oil

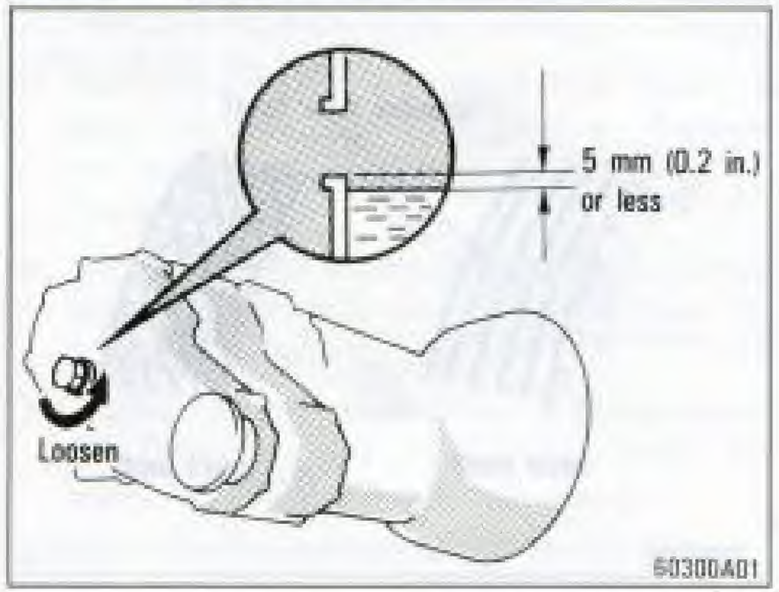

Remove the filler plug and feel inside the hole with your finger. The oil level should be no more than 5 mm (0.2 in.) below the bottom edge of the hole. If the level is O.K., reinstall the plug and tighten it.

a. Make sure the vehicle is level while making this check.

b. After installing the plug, visually check the transfer case for leaks or damage.

CAUTION:

Right after driving the oil may be hot, so be careful.

If the level is low, add multipurpose gear oil (API GL-4 or GL-5) until it begins to run out of the filler hole. Reinstall the plug securely.

Recommended viscocity:
SAE 90

a. Fill the lubricant filler with gear oil.

b. Put the end of the tube into the filler hole and add oil until it begins to run out.

c. Install and retighten the filler plug.

Checking differential oil

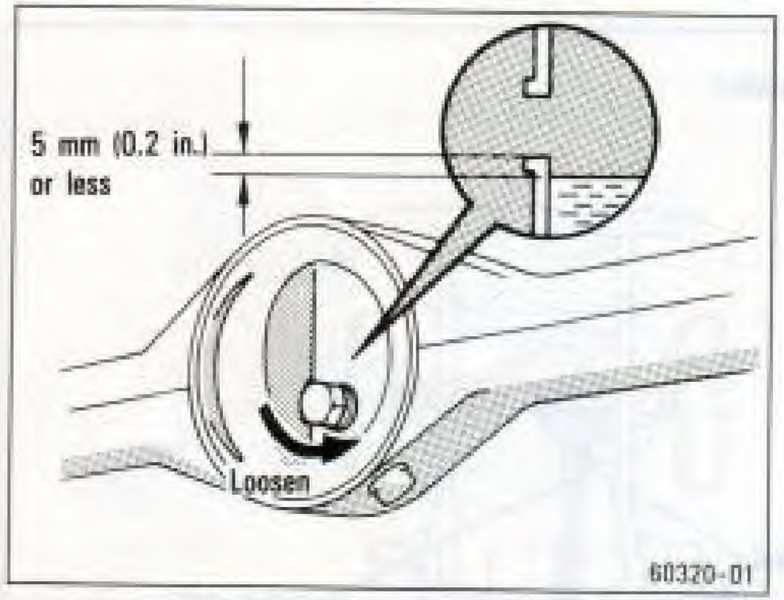

Remove the filler plug and feel inside the hole with your finger. The oil level should be no more than 5 mm (0.2 in.) below the bottom edge of the hole. If the level is O.K., reinstall the plug and tighten it.

a. Make sure the vehicle is parked on a level spot.

b. After installing the plug, visually check the differential and axle for leaks or damage.

CAUTION:

Right after driving the oil may be hot, so be careful.

If the level is low, add hypoid gear oil (API GL-5) or hypoid gear oil for limited-slip differential (API GL-5) depending on the differential type until it begins to run out of the filler hole. Reinstall the plug.

Recommended viscosity:

Above −18°C (0°F)
SAE 90

Below −18°C (0°F)
SAE 80W or 80W-90

a. Fill the lubricant filler with gear oil.

b. Put the end of the tube into the filler hole and add oil until it begins to run out.

c. Install and retighten the filler plug.

Checking tire pressure

Keep your tire pressures at the proper level.

The recommended cold tire pressures and tire sizes are given in Part 8.

You should check the tire pressures every two weeks, or at least once a month. And don't forget the spare!

Incorrect tire pressure can reduce tire life and make your vehicle less safe to drive.

Low tire pressure results in excessive wear, poor handling, reduced fuel economy, and the possibility of blowouts from overheated tires. Also, low tire pressure can cause poor sealing of the tire bead. If the tire pressure is excessively low, there is the possibility of wheel deformation and/or tire separation.

High tire pressure produces a harsh ride, handling problems, excessive wear at the center of the tire tread, and a greater possibility of tire damage from road hazards.

If a tire frequently needs refilling, have it checked by your Toyota dealer.

The following instructions for checking tire pressure should be observed:

- **The pressure should be checked only when the tires are cold.** If your vehicle has been parked for at least 3 hours and has not been driven for more than 1.5 km or 1 mile since, you will get an accurate cold tire pressure reading.
- **Always use a tire pressure gauge.** The appearance of a tire can be misleading. Besides, tire pressures that are even just a few pounds off can degrade handling and ride.
- **Do not bleed or reduce tire pressure after driving.** It is normal for the tire pressure to be higher after driving.
- **Be sure to reinstall the tire inflation valve caps.** Without the valve caps, dirt or moisture could get into the valve core and cause air leakage. If the caps have been lost, have new ones put on as soon as possible.

Checking and replacing tires

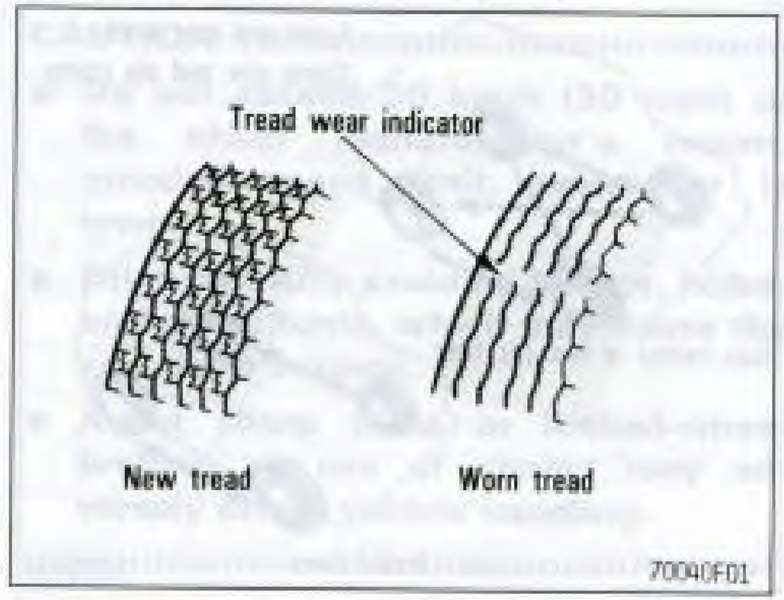

CHECKING YOUR TIRES

Check the tire tread for the tread wear indicators. If the indicators show, replace the tires.

The tires on your Toyota have built-in tread wear indicators to help you know when the tires need replacement. When the tread depth wears to 1.6 mm (0.06 in.) or less, the indicators will appear. If you can see the indicators in two or more adjacent grooves, the tire should be replaced. The lower the tread, the higher the risk of skidding.

The effectiveness of snow tires is lost if the tread wears down below 4 mm (0.16 in.).

Check the tires regularly for damage such as cuts, splits and cracks. If any damage is found, consult with a technician and have the tire repaired or replaced.

Even if the damage does not appear serious, a qualified technician should examine the damage. Objects which have penetrated the tire may have caused internal damage.

Any tires which are over six years old must be checked by a qualified technician even if damage is not obvious.

Tires deteriorate with age even if they have never or seldom been used.

This also applies to the spare tire and tires stored for future use.

REPLACING YOUR TIRES

When replacing a tire, use only the same size and construction as originally installed and with the same or greater load capacity.

Using any other size or type of tire may seriously affect handling, ride, speedometer/odometer calibration, ground clearance, and clearance between the body and tires or snow chains.

CAUTION:

Do not mix radial, bias belted, or bias-ply tires on your vehicle. It can cause dangerous handling characteristics, resulting in loss of control. In Germany, use of different tire construction combinations is forbidden by StVZO.

Never use second-hand tires on your Toyota.

Using tires whose previous history is unknown is a risk.

Toyota recommends all four tires, or at least both of the front or rear tires be replaced at a time as a set.

See "If you have a flat tire" in Part 4 for tire change procedure.

When a tire is replaced, the wheel should always be balanced.

An unbalanced wheel may affect vehicle handling and tire life. Wheels can get out of balance with regular use and should therefore be balanced occasionally.

When replacing a tubeless tire, the air valve should also be replaced with a new one.

Rotating tires

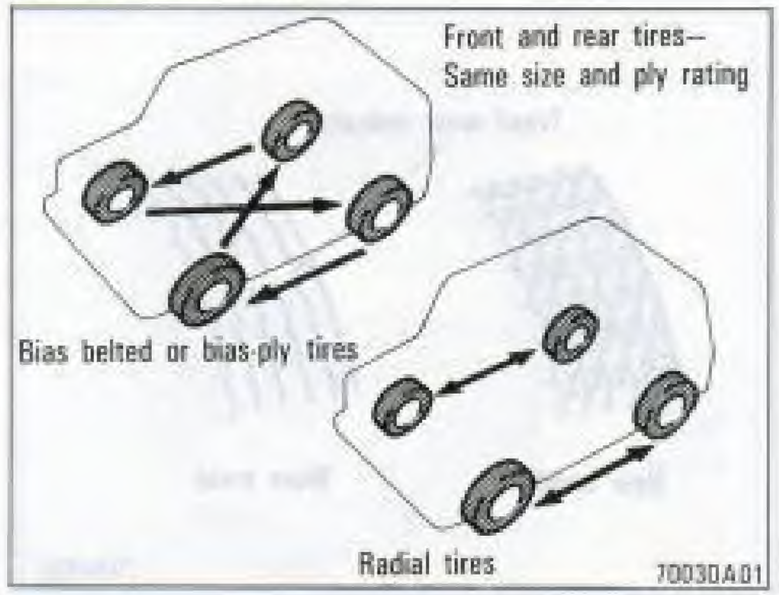

To equalize the wear of your tires, rotate the tires every 10000 km (6000 miles) if all tires are the same size and ply rating. Do not rotate or interchange the front and rear tires if they are not the same size or ply rating.

See "If you have a flat tire" in Part 4 for tire change procedure.

When rotating tires, check for uneven wear and damage. Abnormal wear is usually caused by incorrect tire pressure, improper wheel alignment, out-of-balance wheels, or severe braking.

Installing snow tires and chains

WHEN TO USE SNOW TIRES OR CHAINS

Snow tires or chains are recommended when driving on snow or ice.

On wet or dry roads, conventional tires provide better traction than snow tires.

SNOW TIRE SELECTION

If you need snow tires, select the same size, construction and load capacity as the original tires on your Toyota.

Do not use tires other than those mentioned above. Do not install studded tires without first checking local regulations for possible restrictions.

SNOW TIRE INSTALLATION

Snow tires should be installed on all wheels.

Installing snow tires on the rear wheels only can lead to an excessive difference in road grip capability between the front and rear tires which could cause loss of vehicle control.

Snow tires should be inflated as specified in Part 8.

When storing removed tires, you should store them in a cool dry place.

In case of radial tires, mark the direction of rotation and be sure to install them in the same direction when replacing.

CAUTION:

- **Do not drive with the snow tires incorrectly inflated.**
- **Observe permissible maximum speed for your snow tires and the legal speed limit.**

TIRE CHAIN SELECTION

Use the tire chains of correct size.

Regulations regarding the use of tire chains vary according to location or type of road, so always check them before installing chains.

CHAIN INSTALLATION

When two-wheel driving, install the chains on the rear wheels. Do not use them on the front tires. When four-wheel driving, install them on the rear and/or front wheels. However, for vehicles with 265/75R15 tires mounted on 15 x 7JJ wheels, do not use them on the front tires. Install the chains as tightly as possible. Retighten chains after driving 0.5—1.0 km (1/4—1/2 mile).

When installing chains on your tires, carefully follow the instructions of the chain manufacturer.

If wheel covers are used, they will be scratched by the chain band, so remove the covers before putting on the chains.

CAUTION:

- **Do not exceed 50 km/h (30 mph) or the chain manufacturer's recommended speed limit, whichever is lower.**
- **Drive carefully avoiding bumps, holes, and sharp turns, which may cause the vehicle to bounce.**
- **Avoid sharp turns or locked-wheel braking as use of chains may adversely affect vehicle handling.**

Replacing wheels

WHEN TO REPLACE YOUR WHEELS

If you have wheel damage such as bends, cracks or heavy corrosion, the wheel should be replaced.

If you fail to replace damaged wheels, the tire may slip off the wheel or they may cause loss of handling control.

WHEEL SELECTON

When replacing wheels, care should be taken to ensure that the wheels are replaced by ones with the same load capacity, diameter, rim width, and offset.

Correct replacement wheels are available at your Toyota dealer.

A wheel of a different size or type may adversely affect handling, wheel and bearing life, brake cooling, speedometer/odometer calibration, stopping ability, headlight aim, bumper height, vehicle ground clearance, and tire or snow chain clearance to the body and chassis.

Replacement with used wheels is not recommended as they may have been subjected to rough treatment or high mileage and could fail without warning. Also, bent wheels which have been straightened may have structural damage and therefore should not be used. Never use an inner tube in a leaking wheel which is designed for a tubeless tire.

Aluminum wheel precautions

- After driving your vehicle the first 1600 km (1000 miles), check that the wheel nuts are tight.
- If you have rotated, repaired, or changed your tires, check that the wheel nuts are still tight after driving 1600 km (1000 miles).
- When using tire chains, be careful not to damage the aluminum wheels.
- Use only the Toyota wheel nuts and wrench designed for your aluminum wheels.
- When balancing your wheels, use only Toyota balance weights or equivalent and a plastic or rubber hammer.
- As with any wheel, periodically check your aluminum wheels for damage. If damaged, replace immediately.

Part 7
DO-IT-YOURSELF MAINTENANCE–

Chapter 7-3
Electrical component

- Checking battery condition and fluid level
- Battery recharging precautions
- Checking and replacing fuses
- Checking the fusible links
- Replacing the wiper blades
- Adding washer fluid
- Replacing sealed beam headlight units
- Replacing semi-sealed beam headlight bulbs
- Replacing light bulbs

Checking battery condition and fluid level

CAUTION:

BATTERY PRECAUTIONS

The battery produces an inflammable and explosive hydrogen gas.

- **Do not cause a spark from the battery with tools.**
- **Do not smoke or light a match near the battery.**

The electrolyte contains poisonous and corrosive sulfuric acid.

- **Avoid contact with eyes, skin or clothes.**
- **Never ingest electrolyte.**
- **Wear protective safety glasses when working near the battery.**
- **Keep children away from the battery.**

EMERGENCY MEASURES

- **If electrolyte gets in your eyes, flush your eyes with clean water for at least 15 minutes and get immediate medical attention. If possible, continue to apply water with a sponge or cloth while en route to the medical office.**
- **If electrolyte gets on your skin, thoroughly wash the contacted area. If you feel pain or burning, get medical attention immediately.**
- **If electrolyte gets on your clothes, there is a possibility of its soaking through to your skin, so immediately take off the exposed clothing and follow the procedure above, if necessary.**
- **If you happen to swallow electrolyte, drink a large quantity of water or milk. Follow with milk of magnesia, beaten raw egg or vegetable oil. Then go immediately for emergency help.**

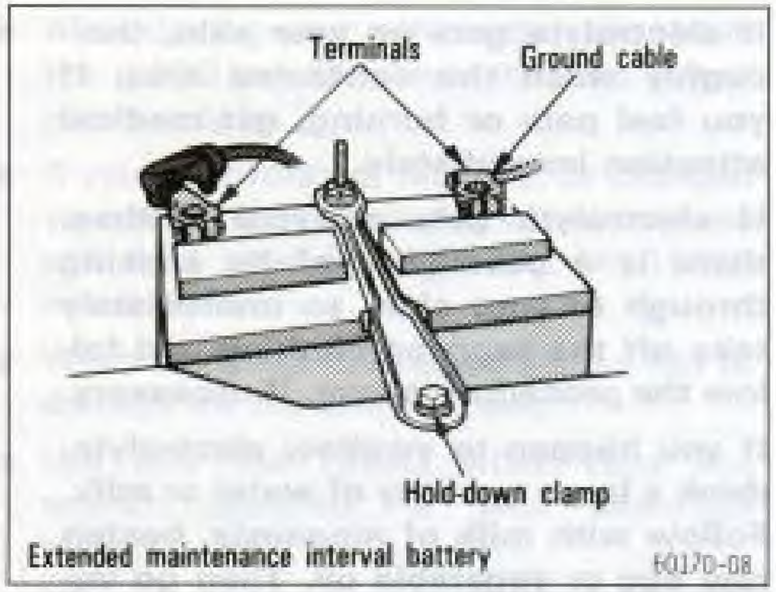

1. Check the battery for corroded or loose connections, cracks, or loose hold-down clamps.

a. If the battery is corroded, wash it off with a solution of warm water and baking soda. Coat the outside of the terminals with grease to prevent further corrosion.

b. If the connections are loose, tighten the clamp bolts—but do not overtighten.

c. Tighten the hold-down clamp only enough to keep the battery firmly in place. Overtightening may damage the battery case.

NOTICE:

Be sure the engine and all accessories are off before performing maintenance.

Remove the ground cable first and reinstall it last. On some diesel-powered vehicles, the two batteries are connected parallel. Therefore, be sure to disconnect both minus (−) terminals before servicing.

Be careful not to cause a short circuit with tools.

On batteries other than extended maintenance interval types, take care no solution gets into the battery when washing.

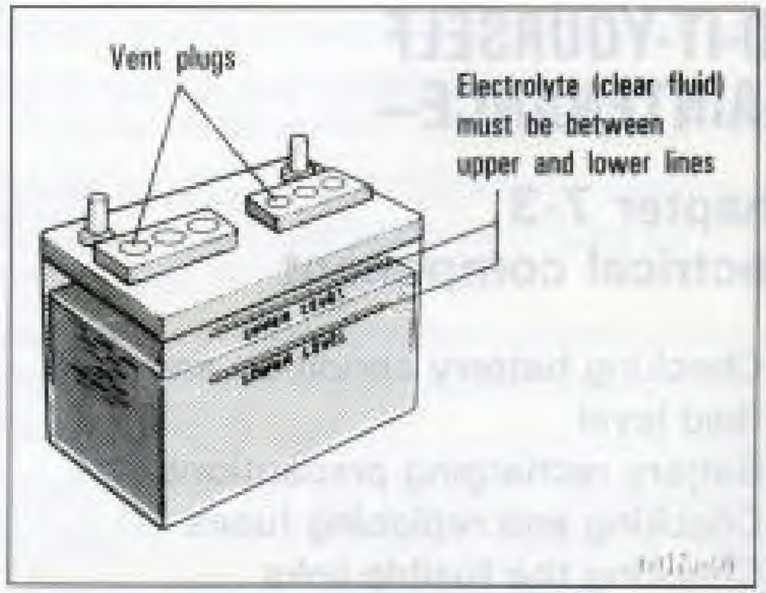

2. Check the electrolyte level as shown above. If the level is low, add distilled water.

a. When checking the electrolyte level, look at all six cells, not just one or two.

b. Remove the vent plugs and replenish the battery with distilled water.

c. After replenishing, be sure to securely retighten the vent plugs.

NOTICE:

Do not overfill the battery or the electrolyte may squirt out of the battery during periods of heavy charging, causing corrosion or damage.

Battery recharging precautions

During recharging, the battery is producing hydrogen gas.

Therefore, before recharging:

1. Remove the vent plugs.

2. If recharging with the battery installed on the vehicle, be sure to disconnect the ground cable.

3. Be sure the power switch on the recharger is off when connecting the charger cables to the battery and when disconnecting them.

CAUTION:

Always charge the battery in an unconfined area. Do not charge the battery in a garage or closed room where there is not sufficient ventilation.

NOTICE:

Never recharge the battery while the engine is running. Also, be sure all accessories are turned off.

Checking and replacing fuses

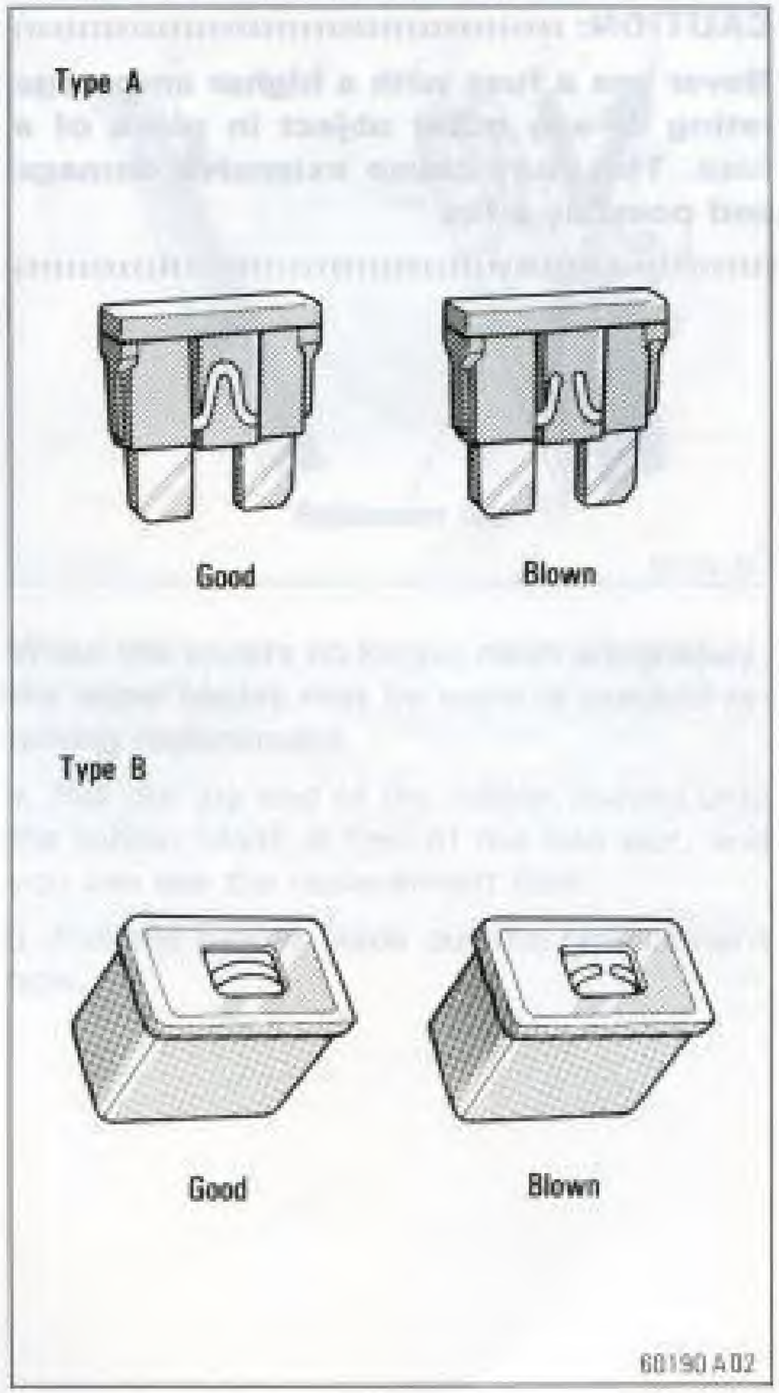

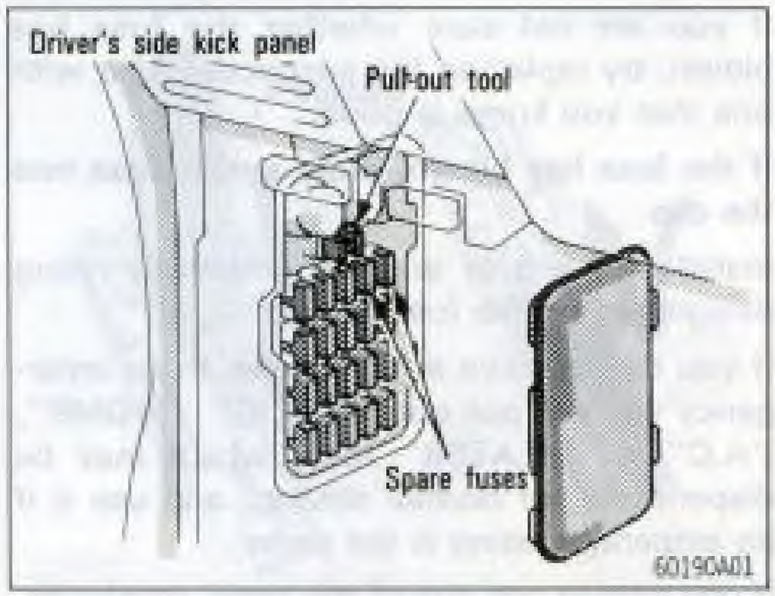

If the headlights or other electrical components do not work, check the fuses. If any of the fuses are blown, they must be replaced.

Turn the ignition switch and inoperative component off. Pull a suspected fuse straight out and check it.

Determine which fuse may be causing the problem. The lid of the fuse box shows the name of the circuit for each fuse. See Part 8 of this manual for the functions controlled by each circuit.

Type A fuses pull out by using the pull-out tool.

If you are not sure whether the fuse has blown, try replacing the suspected fuse with one that you know is good.

If the fuse has blown, push a new fuse into the clip.

Install only a fuse with an amperage rating designated on the fuse box lid.

If you do not have a spare fuse, in an emergency you can pull out the "CIG", "DOME", "A.C" or "HEATER" fuse, which may be dispensable for normal driving, and use it if its amperage rating is the same.

If you cannot use one of the same amperage, use one that is lower, but as close as possible to, the rating. If the amperage is lower than that specified, the fuse might blow out again but this does not indicate anything wrong. Be sure to get a correct fuse as soon as possible and return the substitute to its original clip.

It is a good idea to purchase a set of spare fuses and keep them in your vehicle for emergencies.

If the new fuse immediately blows out, there is a problem with the electrical system. Have your Toyota dealer correct it as soon as possible.

CAUTION:

Never use a fuse with a higher amperage rating or any other object in place of a fuse. This may cause extensive damage and possibly a fire.

Checking the fusible links

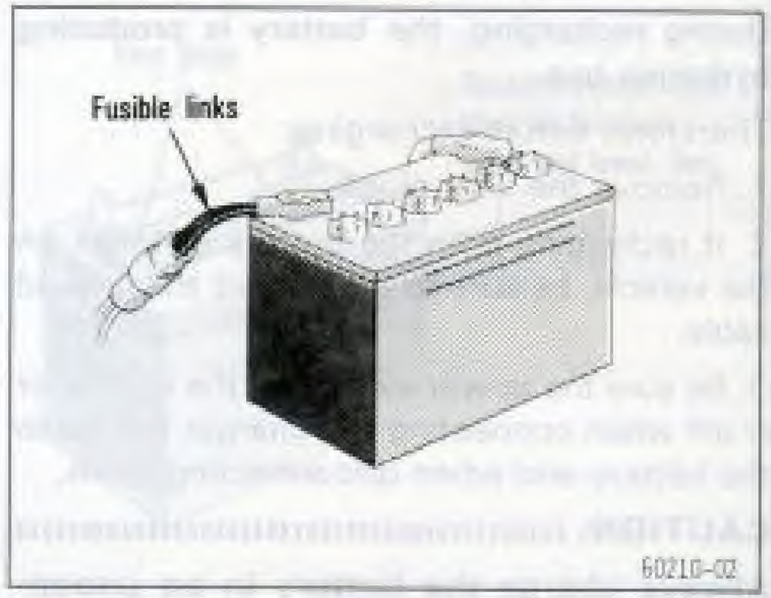

If the headlights or other electrical components do not work and the fuses are O.K., check the fusible links. If any of the links is melted, it must be replaced.

If there is an overload in the circuits from the battery, the fusible links are designed to melt before the entire wiring harness is damaged.

CAUTION:

Always use a genuine Toyota fusible link or equivalent for replacement. Never install a wire—even for a temporary fix. It may cause extensive damage and possibly a fire.

NOTICE:

Before replacing the fusible links, have the cause of electrical overload determined and repaired by your Toyota dealer.

Replacing the wiper blades

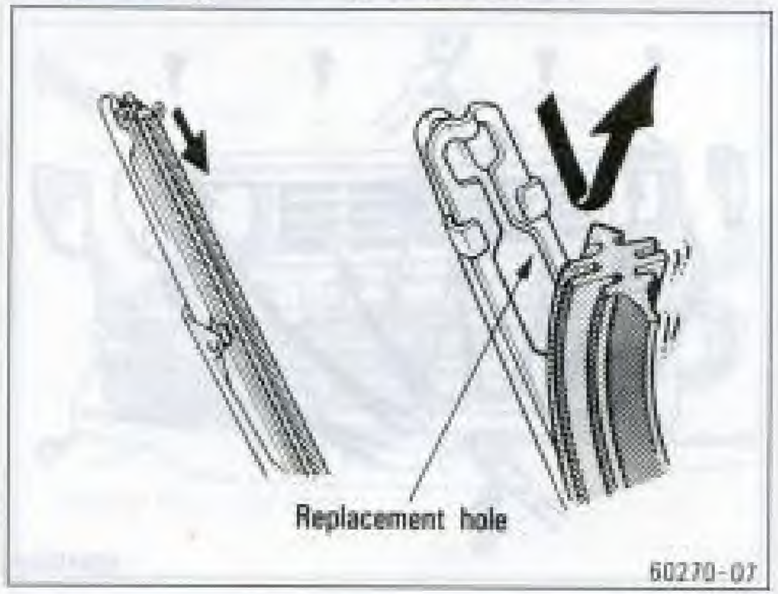

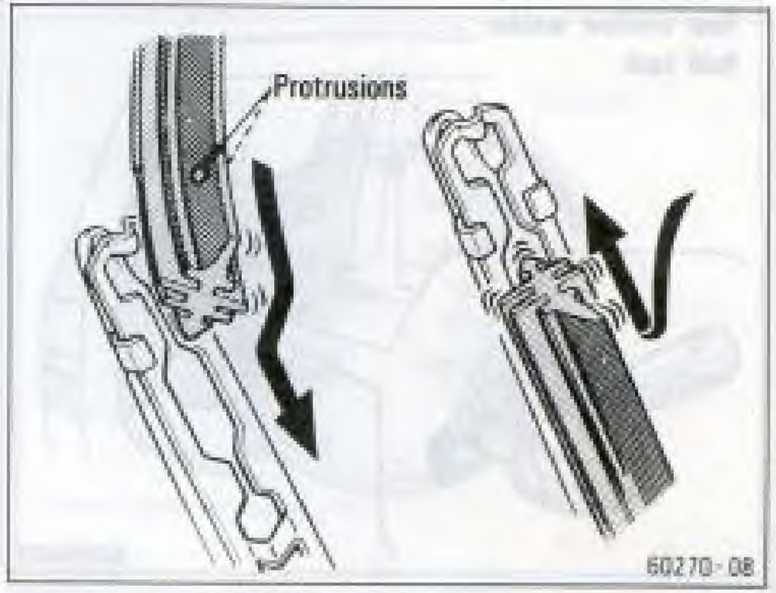

When the wipers no longer clean adequately, the wiper blades may be worn or cracked requiring replacement.

a. Pull the top end of the rubber inward until the rubber blade is free of the end slot, and you can see the replacement hole.

b. Pull the rubber blade out the replacement hole.

c. To install a new rubber, insert the end with small protrusions into the replacement hole, and work the rubber along the slot in the blade frame.

d. Once all of the rubber is in the frame slot, allow it to expand and fill in the end.

NOTICE:

Be careful not to scratch the glass surface with the wiper frame.

Adding washer fluid

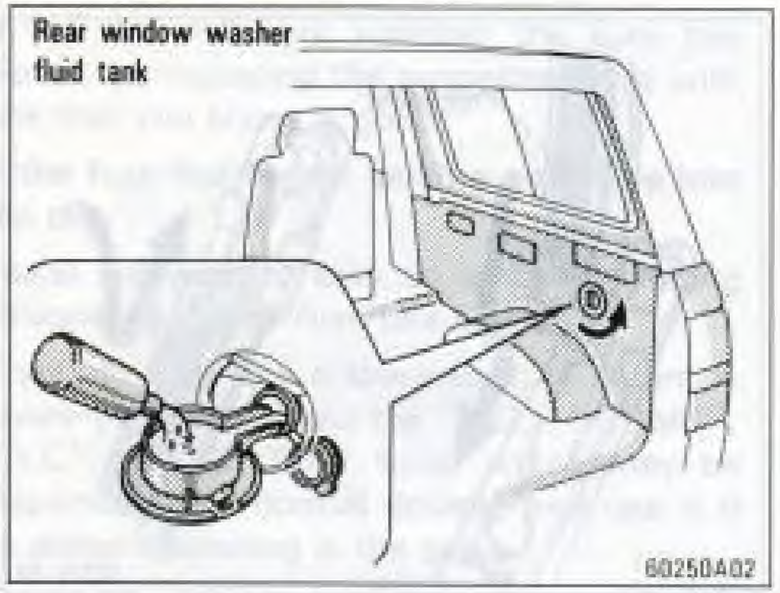

If any washer does not work, the washer tank may be empty. Add washer fluid.

You may use plain water as washer fluid. However, in cold areas where temperatures range below freezing point, use washer fluid containing antifreeze. This product is available at your Toyota dealer and most auto parts stores. Follow the manufacturer's directions for how much to mix with water.

NOTICE:

Do not use engine antifreeze or any other substitute because it may damage your vehicle's paint.

Replacing sealed beam headlight units

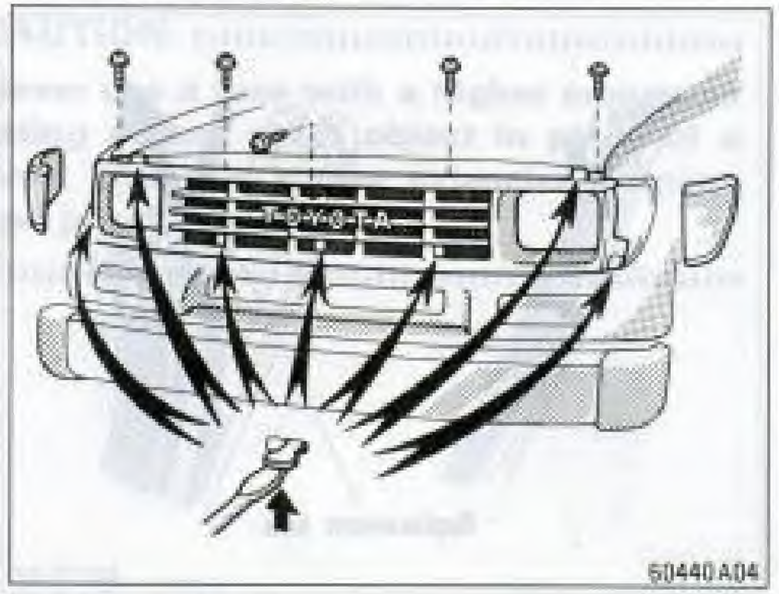

1. Open the hood. Remove the radiator grille retaining screws and take out the parking light units, unplugging the connectors. Release the clips and remove the radiator grille.

The clips can be released with a flat-blade screwdriver as shown.

Before replacement, make sure the headlight switch is off.

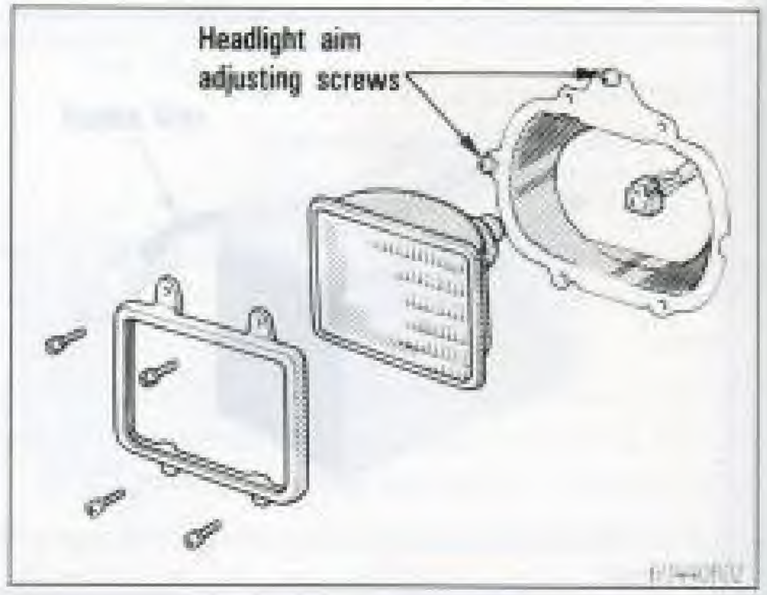

2. Loosen the retainer screws and take out the beam unit together with the retainer, unplugging the connector.

If the connector is tight, wiggle it.

NOTICE:

Never attempt to loosen the headlight aim adjusting screws.

Replacing semi-sealed beam headlight bulbs (round type)

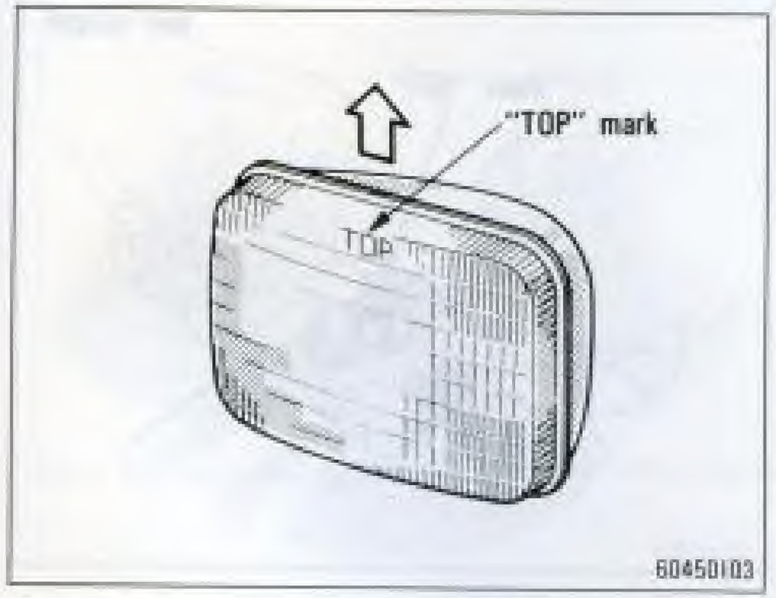

3. Install a new beam unit with the "TOP" mark on the glass face upward, plugging the connector. Put the retainer on the unit and tighten the screws. Install the radiator grille and parking light units.

Unit selection

Use a unit with 65/55 W.

After replacement, have the headlight aim checked by your Toyota dealer.

NOTICE:

Use only a unit of the type specified above.

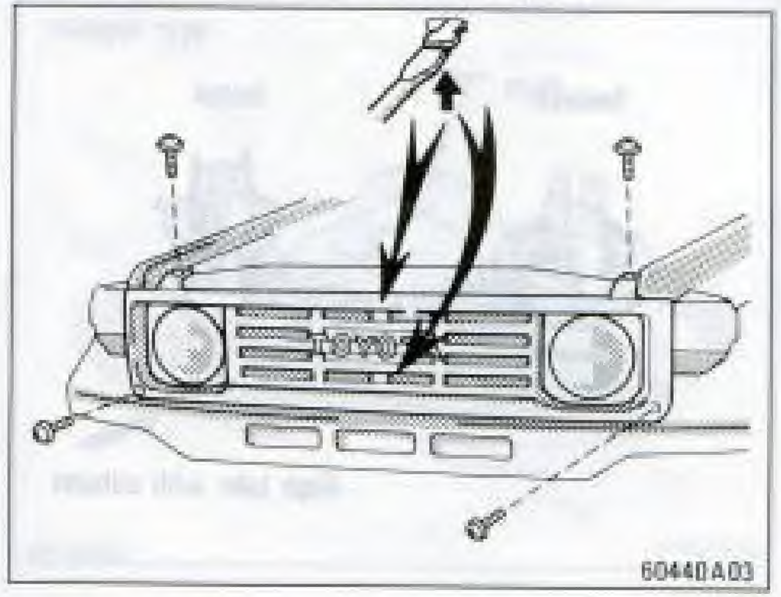

1. Open the hood. Remove the radiator grille retaining screws, release the clips and take out the radiator grille.

The clips can be released with a flat-blade screwdriver as shown.

Before replacement, make sure the headlight switch is off.

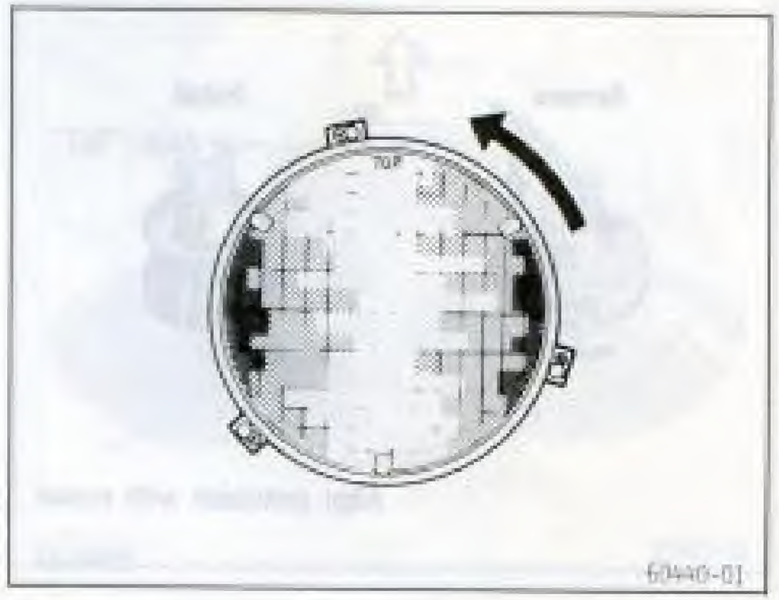

2. Loosen the retaining ring screws and turn the ring counterclockwise. Take out the beam unit together with the ring, unplugging the connector. Remove the rubber cover.

If the connector is tight, wiggle it.

NOTICE:

Never attempt to loosen the headlight aim adjusting screws.

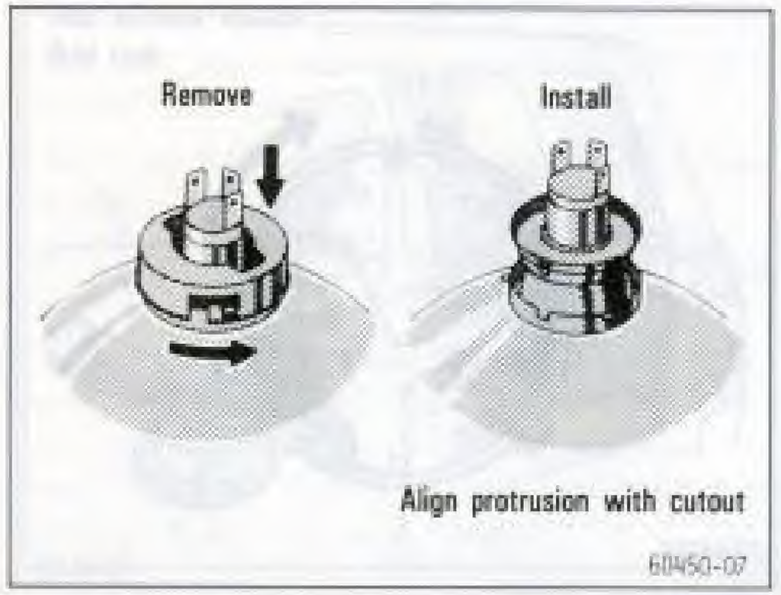

3. REGULAR TYPE: Remove the bulb retaining ring and bulb. Install a new bulb and the bulb retaining ring.

Press the ring and turn it counterclockwise to remove it and clockwise to install it.

To install a bulb, align the protrusion of the bulb with the cutout of the mounting hole.

Bulb selection

Use a bulb with 55/50 W.

NOTICE:

Use only a bulb of the type specified above.

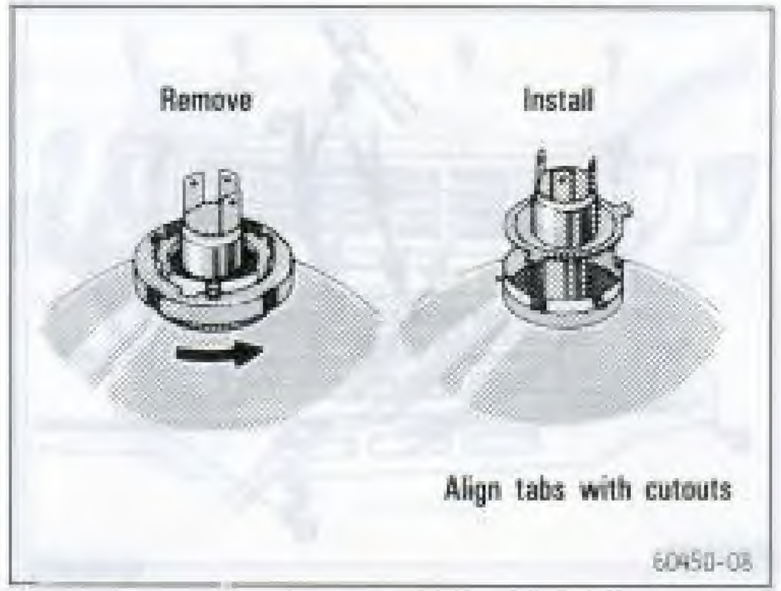

HALOGEN TYPE: Remove the bulb retaining ring and bulb. Install a new bulb and the bulb retaining ring.

Turn the ring counterclockwise to remove it and clockwise to install it.

To install a bulb, align the tabs of the bulb with the cutouts of the mounting hole.

Bulb selection

Use a bulb with 75/70 W (H4).

NOTICE:

Use only a bulb of the type specified above.

Do not touch the glass part of the bulb with bare hands. If you do, clean the glass with alcohol and clean rag.

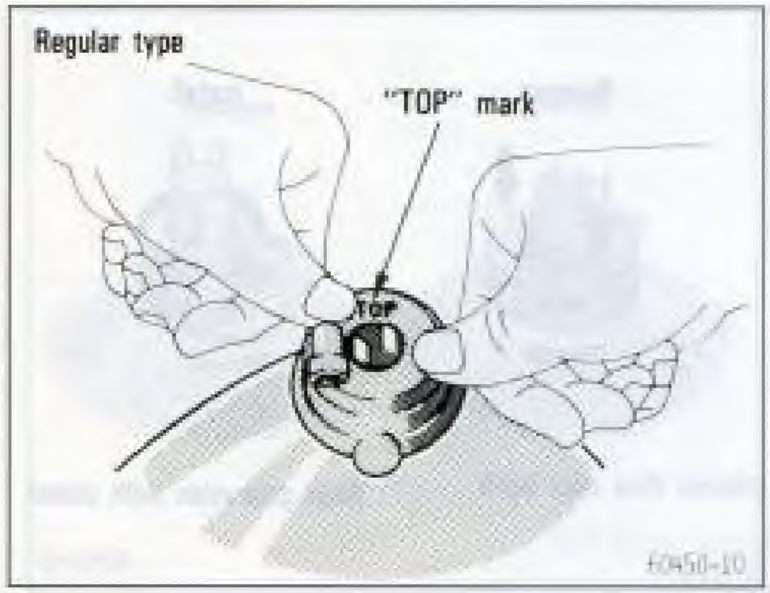

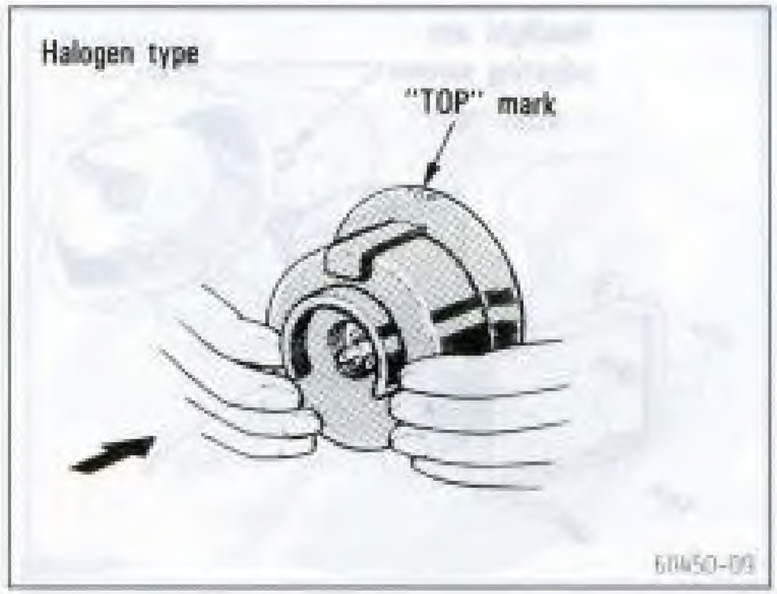

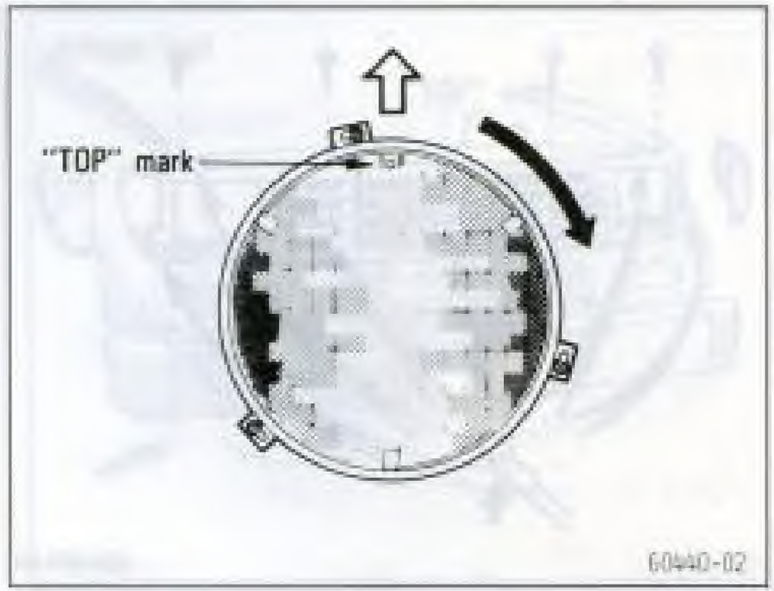

4. Install the rubber cover with the "TOP" mark upward, and snuggle on the boss.

Make sure the rubber cover fits snugly on the bulb base and the mounting body.

5. Install the unit with the "TOP" mark on the glass face upward, plugging the connector. Put the ring on the unit, turn it clockwise and tighten the screws.

After replacement, have the headlight aim checked by your Toyota dealer.

Replacing semi-sealed beam headlight bulbs (rectangular type —except Germany)

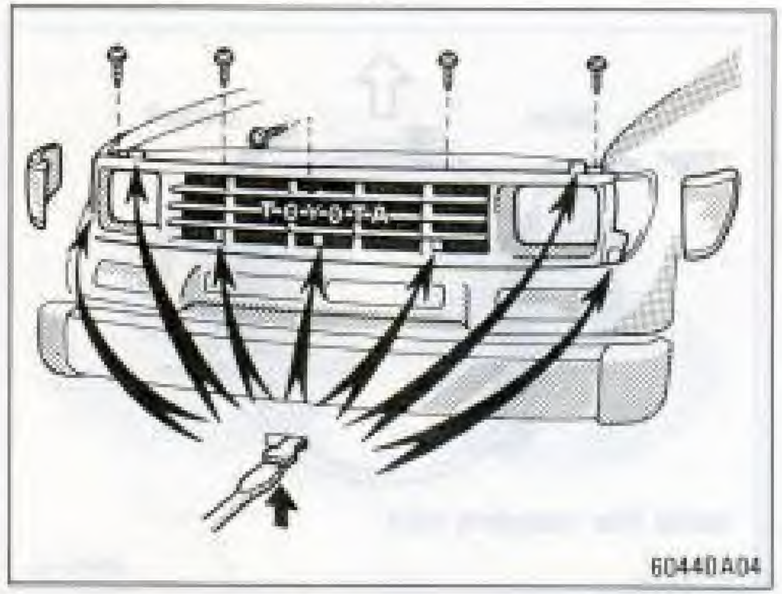

1. Open the hood. Remove the radiator grille retaining screws and take out the parking light units, unplugging the connectors. Release the clips and remove the radiator grille.

The clips can be released with a flat-blade screwdriver as shown.

Before replacement, make sure the headlight switch is off.

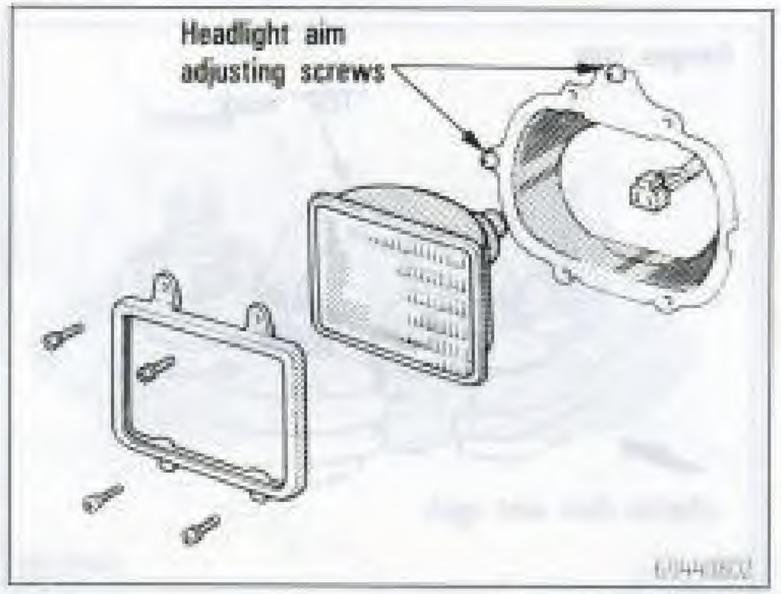

2. Loosen the retainer screws and take out the beam unit together with the retainer, unplugging the connector. Remove the rubber cover.

If the connector is tight, wiggle it.

NOTICE:

Never attempt to loosen the headlight aim adjusting screws.

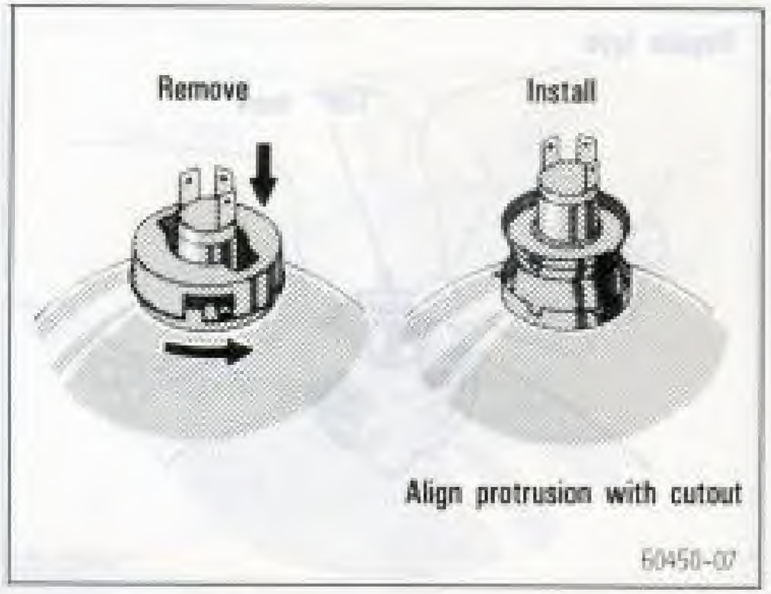

3. REGULAR TYPE: Remove the bulb retaining ring and bulb. Install a new bulb and the bulb retaining ring.

Press the ring and turn it counterclockwise to remove it and clockwise to install it.

To install a bulb, align the protrusion of the bulb with the cutout of the mounting hole.

Bulb selection

Use a bulb with 45/40 W.

NOTICE:

Use only a bulb of the type specified above.

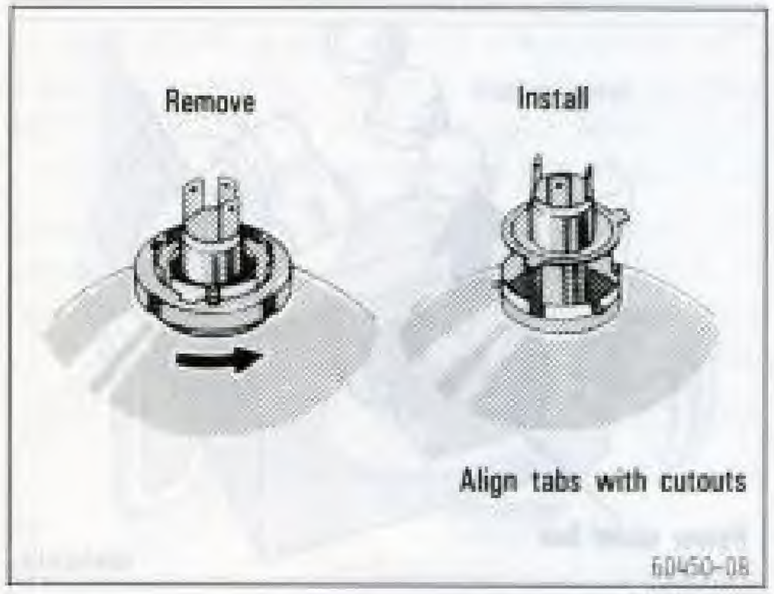

HALOGEN TYPE: Remove the bulb retaining ring and bulb. Install a new bulb and the bulb retaining ring.

Turn the ring counterclockwise to remove it and clockwise to install it.

To install a bulb, align the tabs of the bulb with the cutouts of the mounting hole.

Bulb selection

Use a bulb with the 60/55 W (H4).

NOTICE:

Use only a bulb of the type specified above.

Do not touch the glass part of the bulb with bare hands. If you do, clean the glass with alcohol and clean rag.

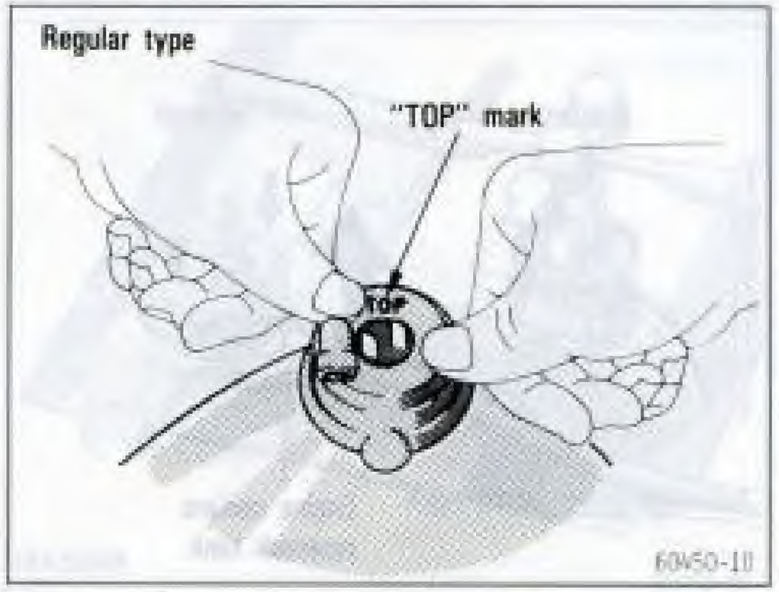

4. Install the rubber cover with the "TOP" mark upward, and snuggle on the boss.

Make sure the rubber cover fits snugly on the bulb base and the mounting body.

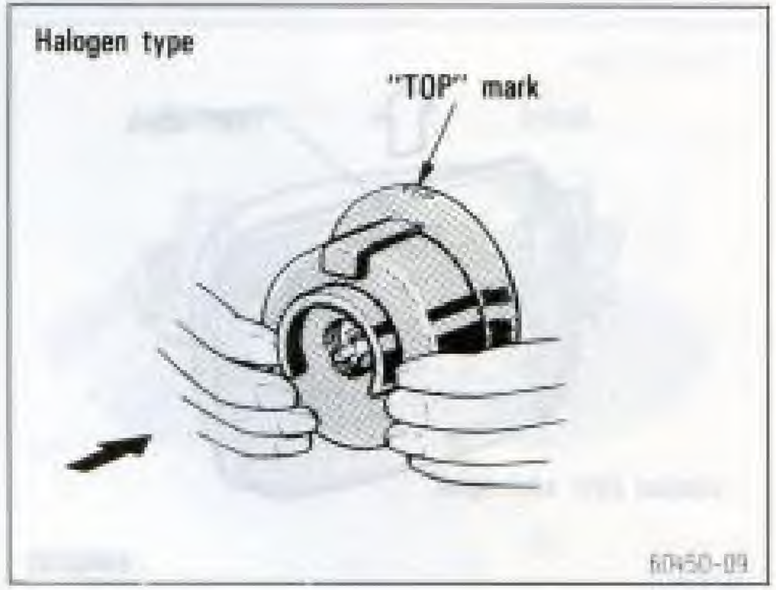

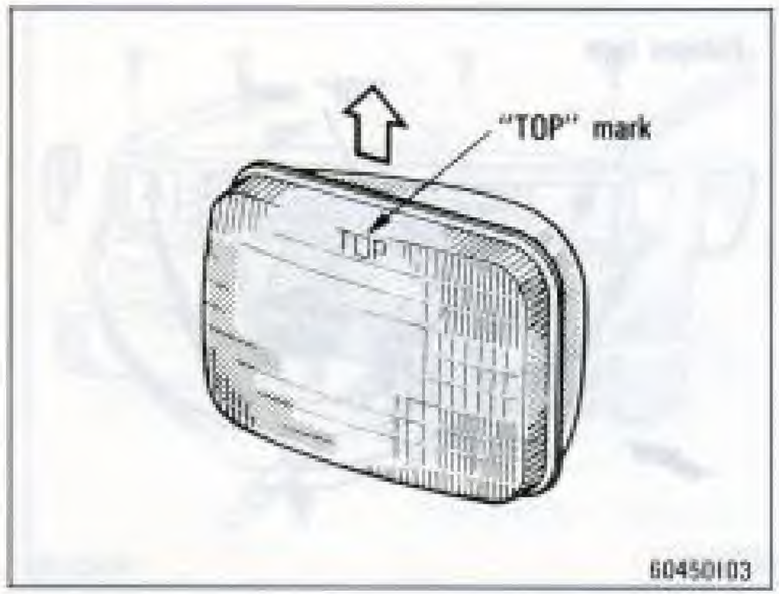

5. Install the unit with the "TOP" mark on the glass face upward, plugging the connector. Put the retainer on the unit and tighten the screws. Install the radiator grille and parking light units.

After replacement, have the headlight aim checked by your Toyota dealer.

Replacing semi-sealed beam headlight bulbs (rectangular type —Germany)

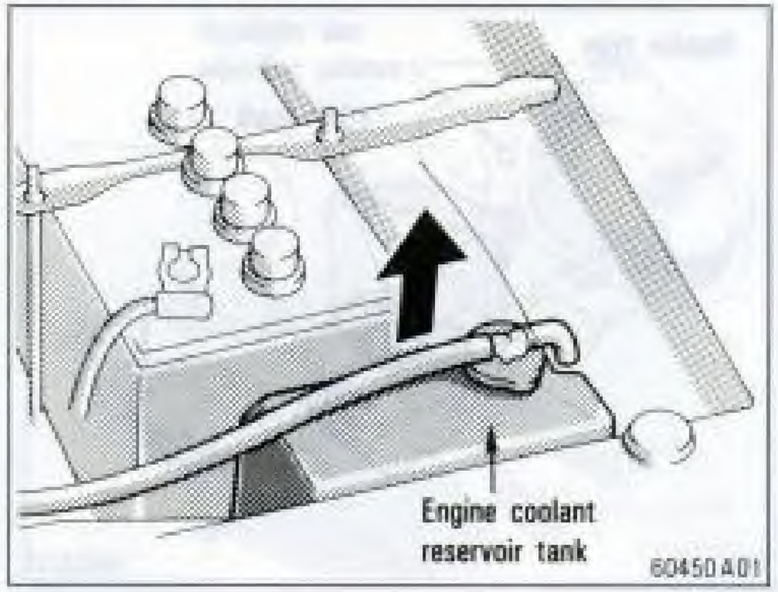

1. Turn off the ignition switch and headlight switch, and open the hood.

LEFT-HAND HEADLIGHT: Remove the engine coolant reservoir tank.

a. Pull out the engine coolant reservoir tank.

b. Put the engine coolant reservoir tank in the appropriate place other than on the engine or battery.

NOTICE:

Be careful not to spill the engine coolant.

Do not place the reservoir tank on the engine or battery.

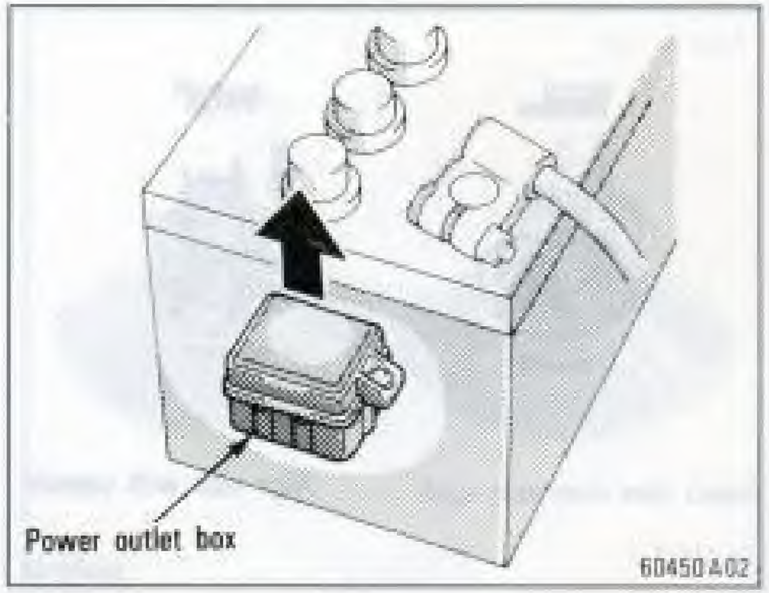

RIGHT-HAND HEADLIGHT (22R ENGINE ONLY): Remove the power outlet box.

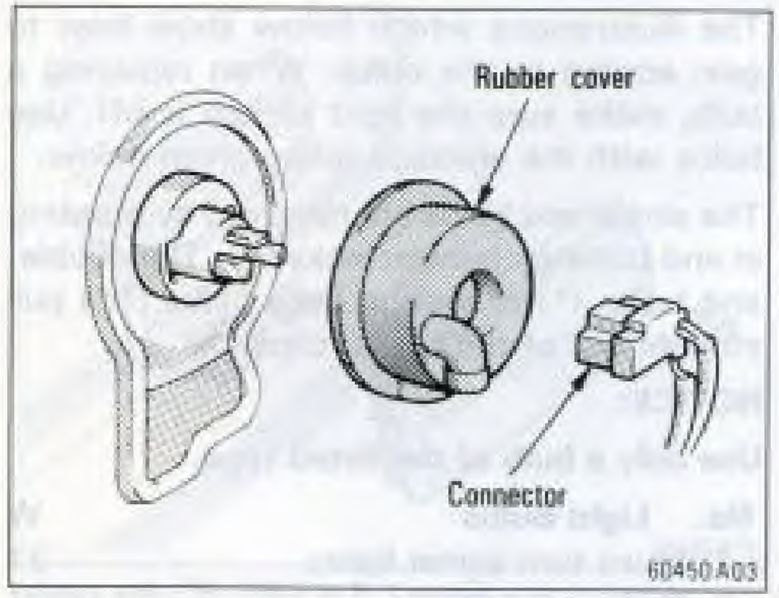

2. Unplug the connector. Remove the rubber cover.

If the connector is tight, wiggle it.

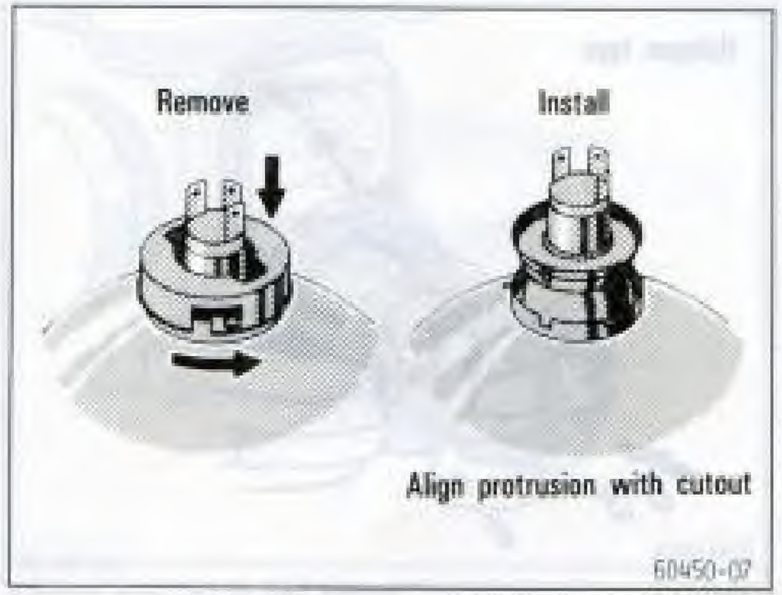

3. REGULAR TYPE: Remove the bulb retaining ring and bulb. Install a new bulb and the bulb retaining ring.

Press the ring and turn it counterclockwise to remove it and clockwise to install it.

To install a bulb, align the protrusion of the bulb with the cutout of the mounting hole.

Bulb selection

Use a bulb with 45/40 W.

NOTICE:

Use only a bulb of the type specified above.

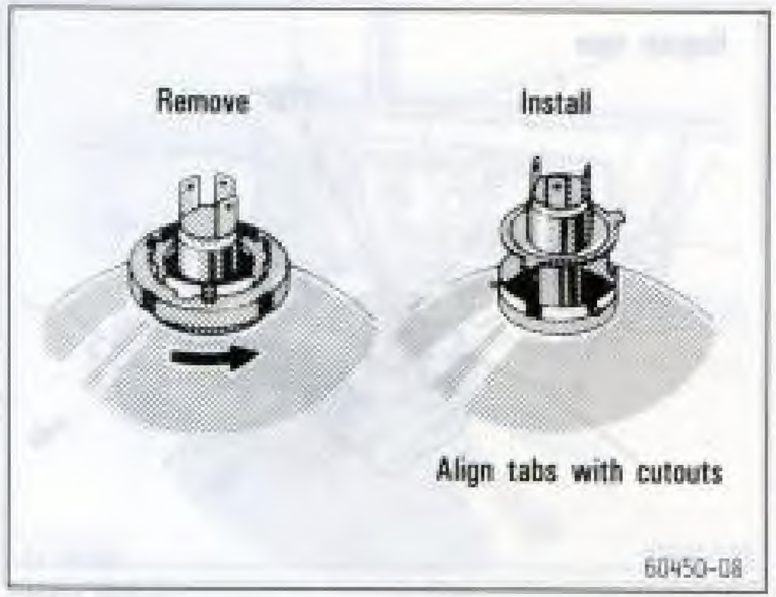

HALOGEN TYPE: Remove the bulb retaining ring and bulb. Install a new bulb and the bulb retaining ring.

Turn the ring counterclockwise to remove it and clockwise to install it.

To install a bulb, align the tabs of the bulb with the cutouts of the mounting hole.

Bulb selection

Use a bulb with 60/55 W (H4).

NOTICE:

Use only a bulb of the type specified above.

Do not touch the glass part of the bulb with bare hands. If you do, clean the glass with alcohol and clean rag.

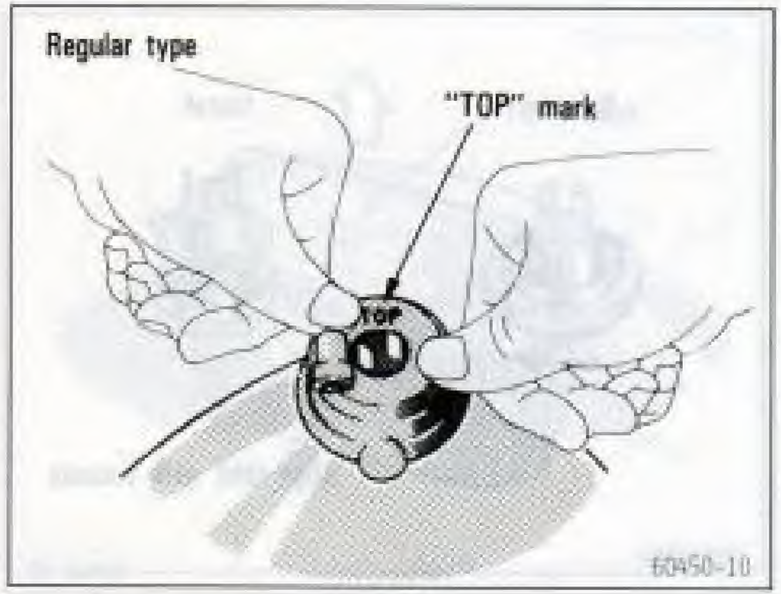

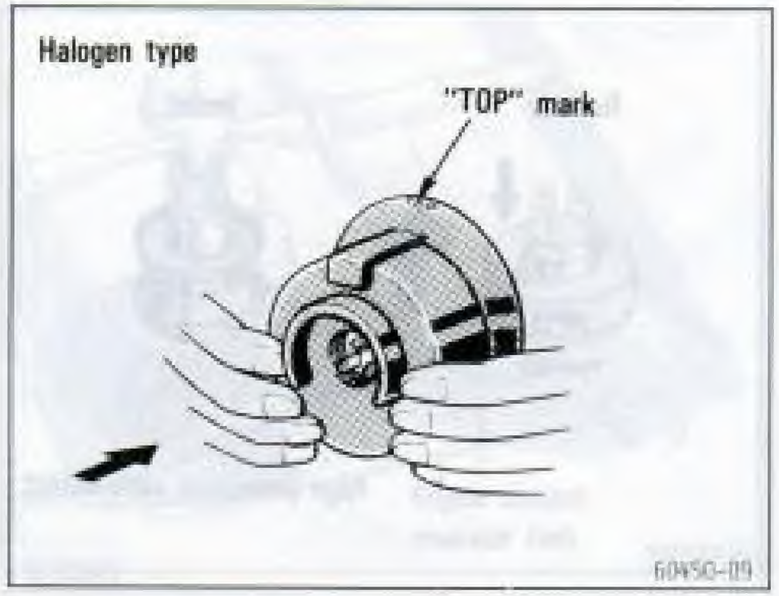

4. Install the rubber cover with the "TOP" mark upward, and snuggle on the boss. Insert the connector.

Make sure the rubber cover fits snugly on the bulb base and the mounting body.

After replacement, have the headlight aim checked by your Toyota dealer.

Replacing light bulbs

The illustrations which follow show how to gain access to the bulbs. When replacing a bulb, make sure the light switch is off. Use bulbs with the wattage rating given below.

The single end bulbs are removed by pressing in and turning counterclockwise. The double-end bulbs (*) or wedge base bulbs (**) pull straight out of the holder clips.

NOTICE:

Use only a bulb of the listed type.

No.	Light Bulbs	W
1	Front turn signal lights	21
2	Parking lights	
	Vehicles with 22R, 22R-E, or 2L-T engine**	5
	Vehicles with 1PZ or 1HZ engine	5
3	Side turn signal lights	5
4	Stop and tail lights	21/5
5	Rear turn signal lights	21
6	Back-up lights	21
7	Rear fog light	21
8	License plate lights	
	Except pick-up	5
	Pick-up	10
9	Interior light*	10
10	Personal lights	
	12 V system	8
	24 V system	6
11	Luggage compartment light*	10

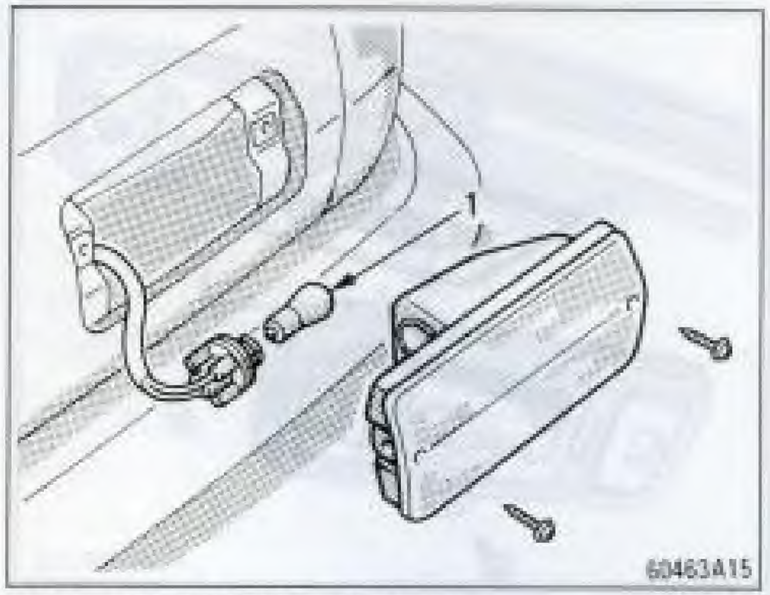

Vehicles with 22R, 22R-E or 2L-T engine:
Front turn signal lights

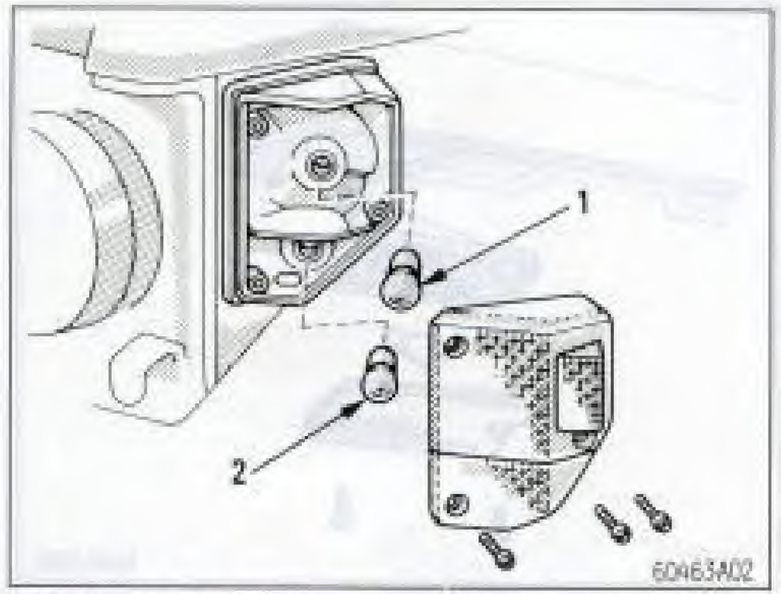

Vehicles with 1PZ or 1HZ engine:
Front turn signal and parking lights

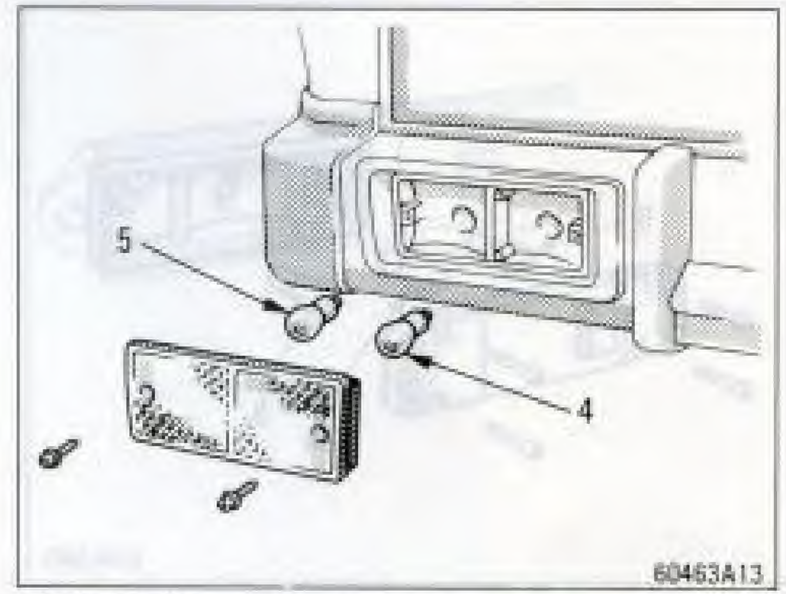

Except pick-up:
Stop and tail and rear turn signal lights

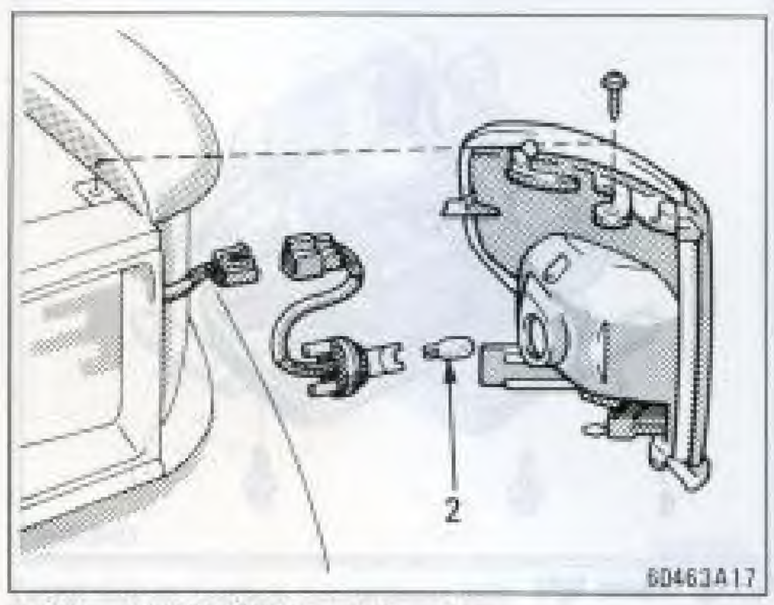

Vehicles with 22R, 22R-E or 2L-T engine:
Parking lights

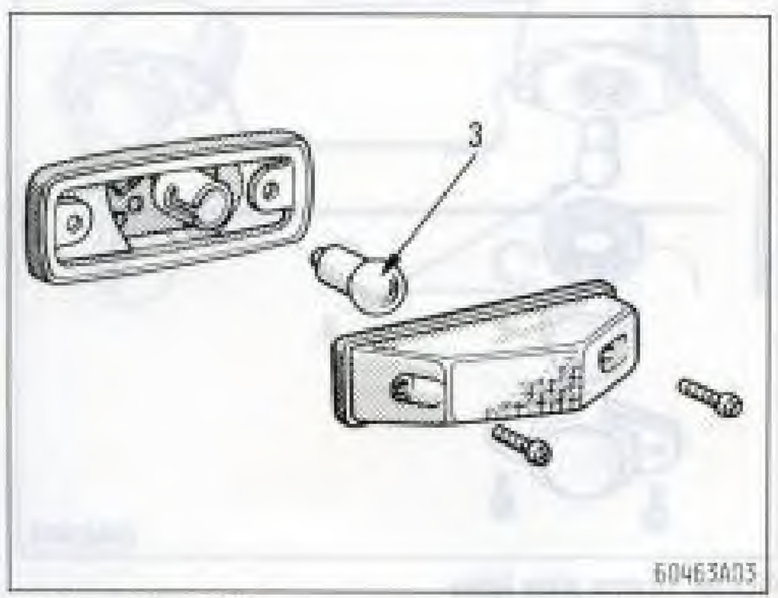

Side turn signal lights

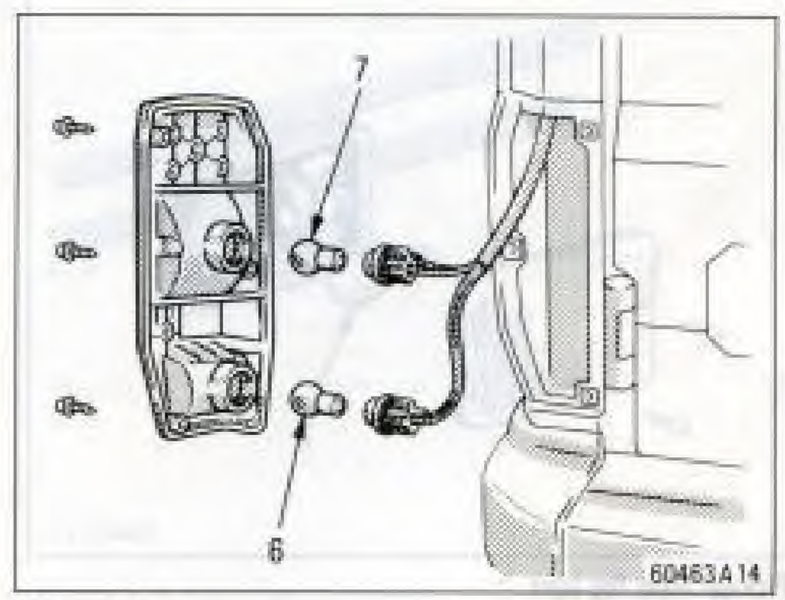

Except pick-up:
Back-up and rear fog lights

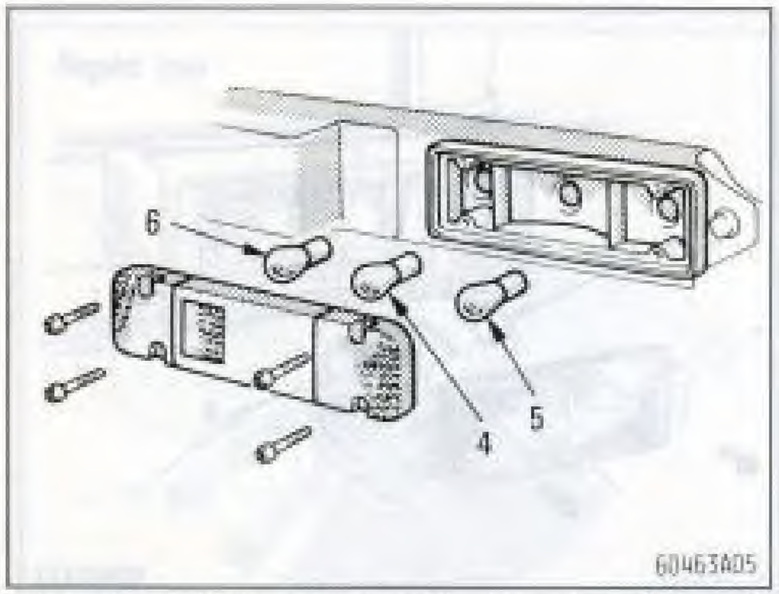

Pick-up: Rear turn signal, stop and tail, and back-up lights

Except pick-up: License plate lights

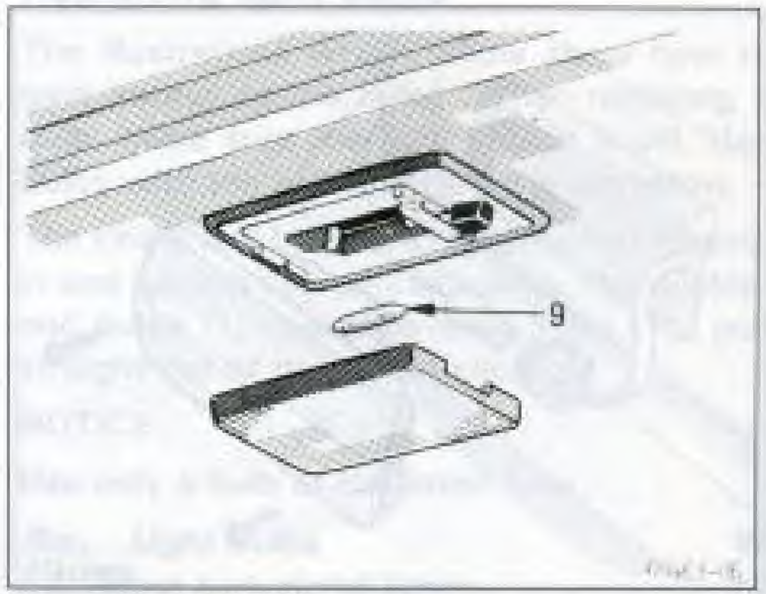

Except pick-up: Interior light

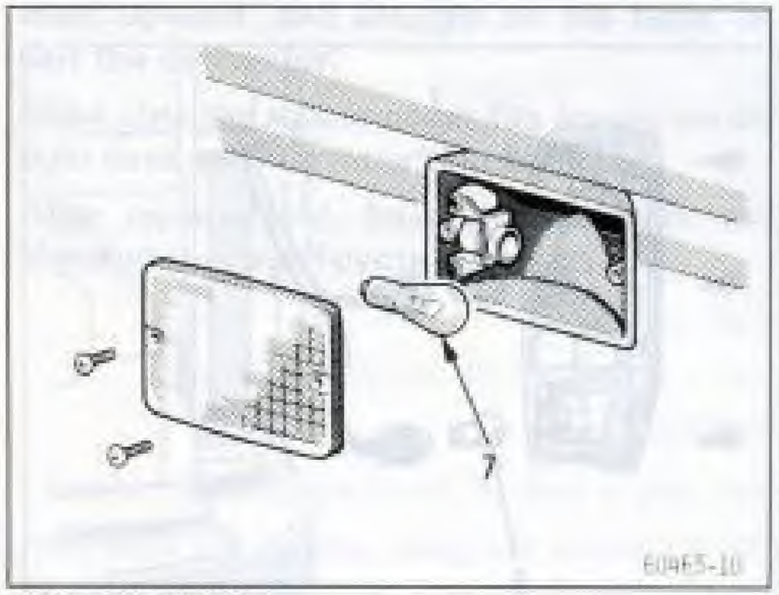

Pick-up: Rear fog light

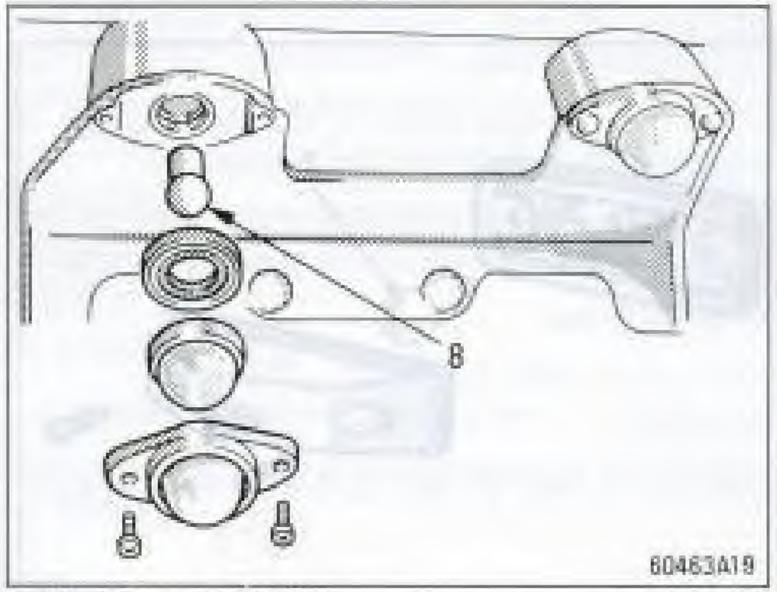

Pick-up: License plate lights

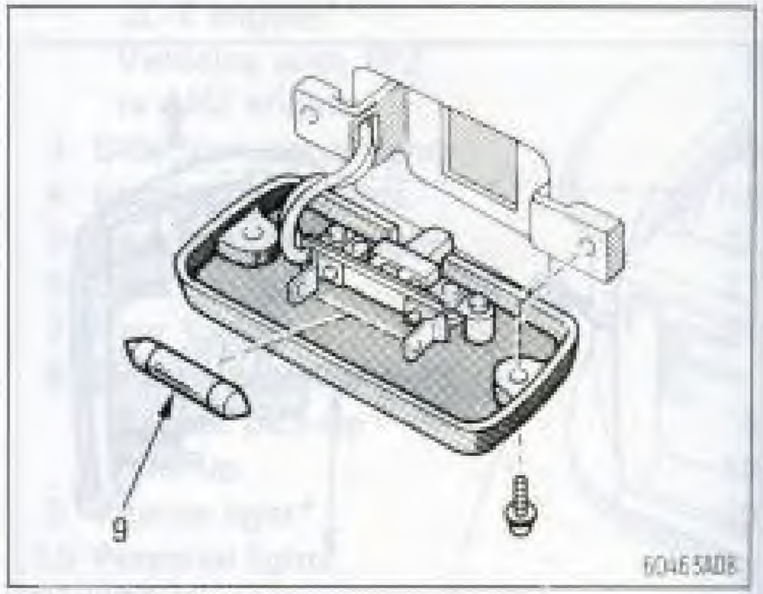

Pick-up: Interior light

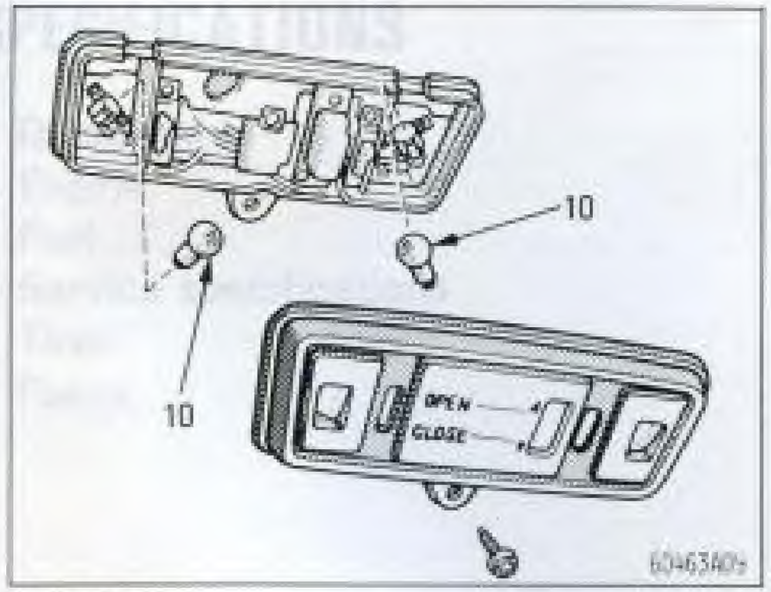

Personal lights

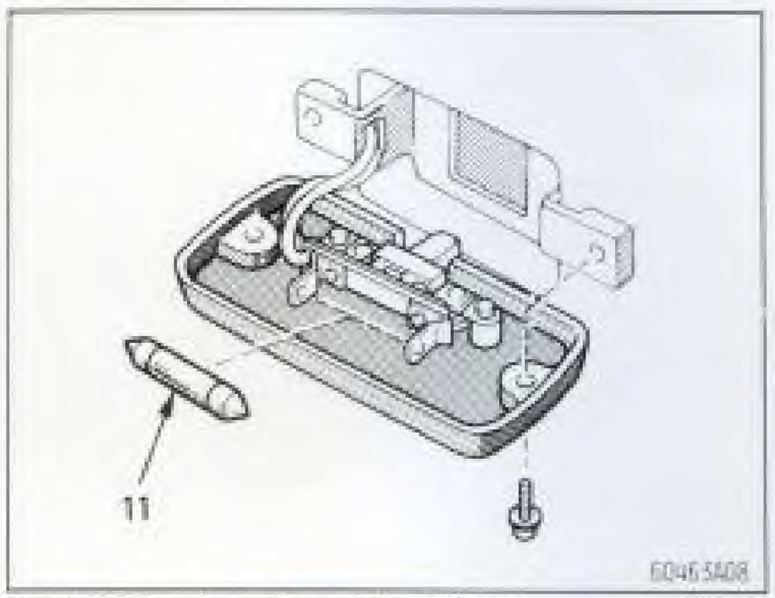

Except pick-up: Luggage compartment light

Part 8
SPECIFICATIONS

- Dimensions
- Engine
- Fuel
- Service specifications
- Tires
- Fuses

Dimensions

		SOFT-TOP	HARDTOP			
		LJ70	RJ70 and LJ70	HZJ70	PZJ75	LJ77
Overall length	mm (in.)	4030–4115 (158.7–162.0)	4025–4115 (158.5–162.0)	4055–4310 (159.6–169.7)	4995–5270 (196.7–207.5)	4680–4755 (184.3–187.2)
Overall width	mm (in.)	1690 (66.5) 1790 (70.5)*1	1690 (66.5) 1790 (70.5)*1	1690 (66.5) 1790 (70.5)*1	1690 (66.5)	1690 (66.5) 1790 (70.5)*1
Overall height	mm (in.)	1900–1920 (74.8–75.6)	1880–1925 (74.0–75.8)	1880–2135 (74.0–84.1)	2050–2325 (80.7–91.5)	1900–2130 (74.8–83.9)
Wheelbase	mm (in.)	2310 (90.9)	2310 (90.9)	2310 (90.9)	2980 (117.3)	2730 (107.5)
Front tread	mm (in.)	1415 (55.7) 1455 (57.3)*1	1415 (55.7) 1455 (57.3)*1	1415 (55.7) 1455 (57.3)*1	1415 (55.7)	1415 (55.7) 1455 (57.3)*1
Rear tread	mm (in.)	1400 (55.1) 1440 (56.7)*1	1400 (55.1) 1440 (56.7)*1 1455 (57.3)*4 1415 (55.7)*5	1410 (55.5) 1450 (57.1)*1 1400 (55.1)*2 1440 (56.7)*3	1410 (55.5) 1400 (55.1)*2	1400 (55.1) 1440 (56.7)*1

*1: With 265/75R15 tires
*2: With full-floating axle
*3: With full-floating axle and 265/75R15 tires
*4: With 265/75R15 tires and rear disc brakes
*5: With rear disc brakes
*6: With rear side boards

		FRP TOP		PICK-UP
		RJ73 and LJ73	HZJ73	PZJ75
Overall length	mm (in.)	4330–4405 (170.5–173.4)	4345–4600 (171.1–181.1)	4885–5185 (192.3–204.1)
Overall width	mm (in.)	1690 (66.5) 1790 (70.5)*1	1690 (66.5) 1790 (70.5)*1	1690 (66.5) 1695 (66.7)*6
Overall height	mm (in.)	1935 (76.2) 1950 (76.8)*1	1910–1965 (75.2–77.4)	1895–2280 (74.6–89.8)
Wheelbase	mm (in.)	2600 (102.4)	2600 (102.4)	2980 (117.3)
Front tread	mm (in.)	1415 (55.7) 1455 (57.3)*1	1415 (55.7) 1455 (57.3)*1	1415 (55.7)
Rear tread	mm (in.)	1400 (55.1) 1440 (56.7)*1 1455 (57.3)*4 1415 (55.7)*5	1410 (55.5) 1450 (57.1)*1 1400 (55.1)*2 1440 (56.7)*3	1410 (55.5) 1400 (55.1)*2

Engine

Model: 22R, 22R-E, 2L-T, 1PZ and 1HZ

Type:

22R and 22R-E engines
4 cylinder in line, 4 cycle, gasoline

2L-T engine
4 cylinder in line, 4 cycle, diesel (turbocharged)

1PZ engine
5 cylinder in line, 4 cycle, diesel

1HZ engine
6 cyliner in line, 4 cycle, diesel

Bore and stroke, mm (in.):

22R and 22R-E engines
92.0 x 89.0 (3.62 x 3.50)

2L-T engine
92.0 x 92.0 (3.62 x 3.62)

1PZ and 1HZ engines
94.0 x 100.0 (3.70 x 3.94)

Displacement, cm^3 (cu. in.):

22R and 22R-E engines	2367 (144.4)
2L-T engine	2446 (149.2)
1PZ engine	3470 (211.7)
1HZ engine	4164 (254.1)

Fuel

Fuel type:

Gasoline engine—

Vehicles sold in Germany or with a catalytic converter: Unleaded gasoline with the following octane number or higher (Research Octane Number)

22R engine	90
22R-E engine	91

Vehicles with 22R engine sold outside Germany: Using unleaded gasoline with 90 octane number or higher (Research Octane Number) is recommended. If it is impossible to get unleaded gasoline by any means, you may use leaded gasoline with 90 octane number or higher (Research Octane Number).

Diesel engine—

Diesel fuel with cetane number 48 or higher

Fuel tank capacity, L (gal. Imp. gal.):
90 (23.8, 19.8)

Service specifications

ENGINE

Valve clearance, mm (in.):

22R and 22R-E engines*

Intake	0.20 (0.008)
Exhaust	0.30 (0.012)

2L-T engine**

Intake	0.20—0.30 (0.008—0.012)
Exhaust	0.40—0.50 (0.016—0.020)

1PZ and 1HZ engines**

Intake	0.15—0.25 (0.006—0.010)
Exhaust	0.35—0.45 (0.014—0.018)

*: with engine hot
**: with engine cold

Spark plug type:

NIPPONDENSO	W16EXR-U
NGK	BPR5EY

Spark plug gap, mm (in.):
0.8 (0.031)

Drive belt deflection with 98 N (10 kgf, 22lb.) thumb pressure (used belt), mm (in.):

22R and 22R-E engines

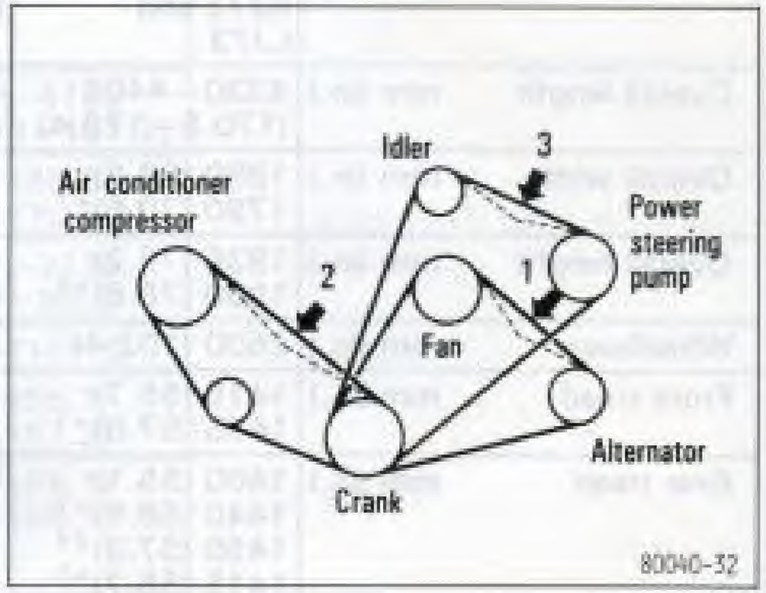

2L-T engine

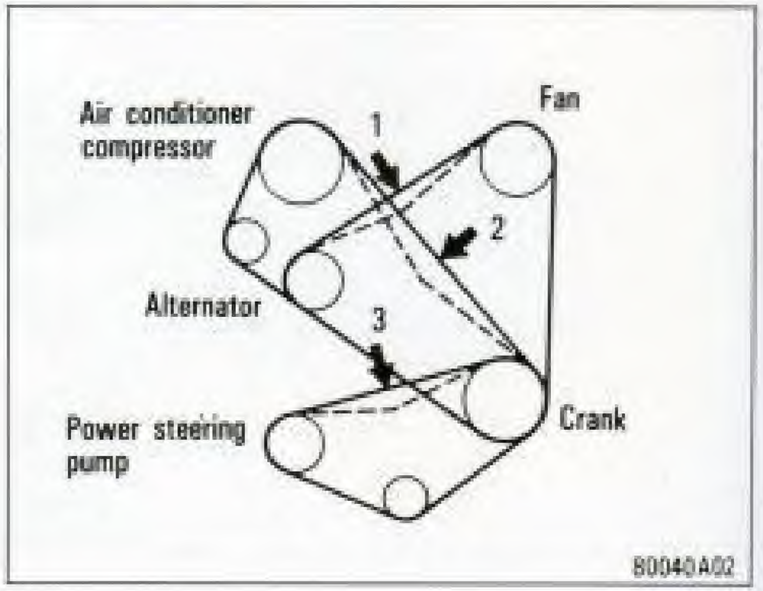

1PZ and 1HZ engines

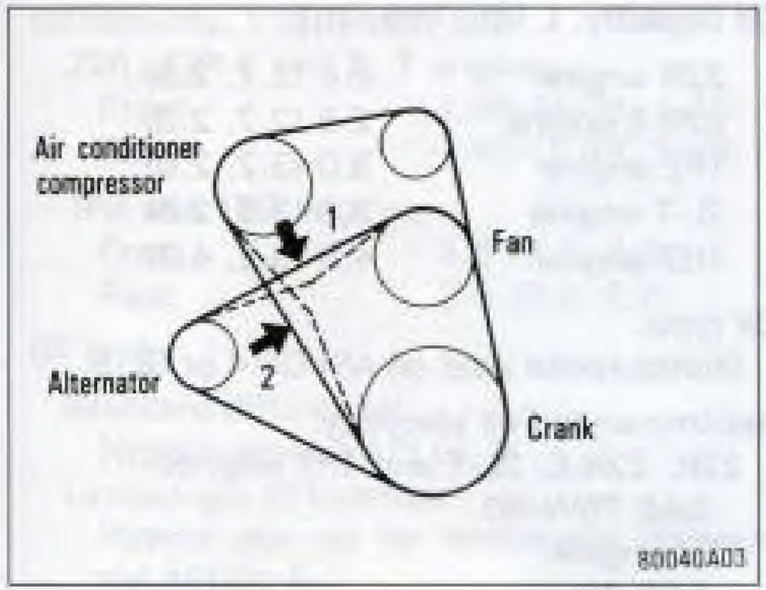

22R and 22R-E engines
1. 7–10 (0.28–0.39)
2. 9.5–13 (0.37–0.51)
3. 7–11 (0.28–0.43)

2L-T engine
1. 10–14 (0.39–0.55)
2. 17–21 (0.67–0.83)
3. 10–15 (0.39–0.59)

1PZ and 1HZ engines
1. 8–11 (0.31–0.43)
2. 16–22 (0.63–0.87)

Ignition timing:
22R engine (with vacuum advancer off)
5° BTDC
22R-E engine
(with terminals E_1-TE_1 of check connector connected)
5° BTDC

ENGINE LUBRICATION

Oil capacity, L (qt., Imp. qt.):

22R and 22R-E engines	
Dry fill	4.8 (5.1, 4.2)
Drain and refill	
with filter	4.3 (4.5, 3.8)
without filter	3.8 (4.0, 3.3)
2L-T engine	
Dry fill	7.4 (7.8, 6.5)
Drain and refill	
with filter	6.7 (7.1, 5.9)
without filter	5.7 (6.0, 5.0)
1PZ engine	
Dry fill	9.3 (9.8, 8.2)
Drain and refill	
with filter	9.0 (9.5, 7.9)
without filter	7.7 (8.1, 6.8)
1HZ engine	
Dry fill	9.8 (10.1, 8.6)
Drain and refill	
with filter	9.5 (10.0, 8.4)
without filter	8.2 (8.7, 7.2)

Oil grade (API):
Gasoline engine SG or better
(If it is impossible to get SG or better grade, you may use SF grade.)
Diesel engine CD or better

Recommended oil viscosity (SAE):

GASOLINE ENGINE

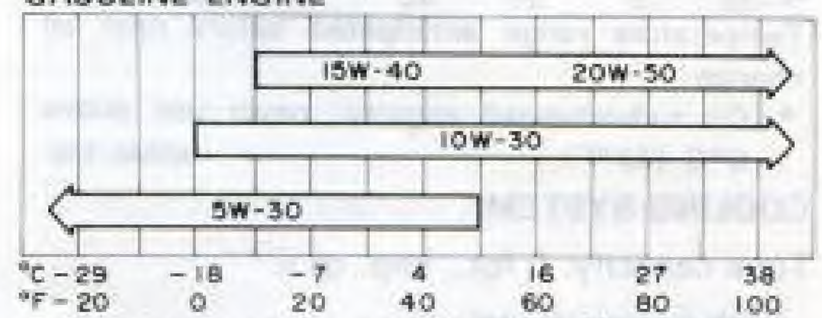

Temperature range anticipated before next oil change

DIESEL ENGINE

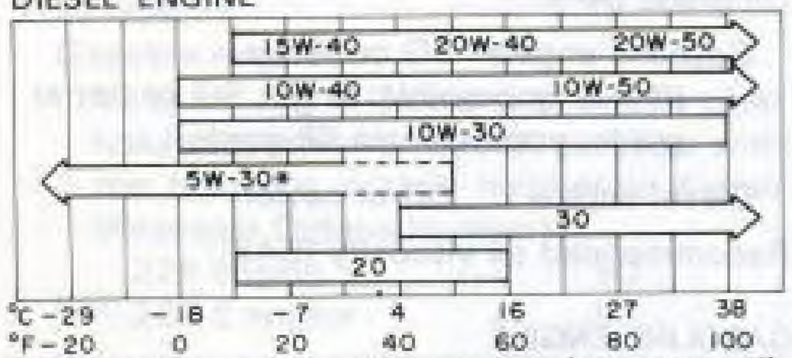

Temperature range anticipated before next oil change

*: On turbocharged engines, never use above 0°C (32°F).

80040-10E

COOLING SYSTEM

Total capacity, L (qt., Imp. qt.):

With heater (front)	
22R and 22R-E engines	10.0 (10.6, 8.8)
2L-T engine	10.9 (11.5, 9.6)
1PZ engine	10.3 (10.9, 9.1)
1HZ engine	10.6 (11.2, 9.3)
With heater (front and rear)	
22R and 22R-E engines	11.0 (11.6, 9.7)
2L-T engine	11.5 (12.2, 10.1)
1PZ engine	11.3 (11.9, 9.9)
1HZ engine	11.6 (12.2, 10.2)
Without heater	
22R and 22R-E engines	8.0 (8.5, 7.0)
2L-T engine	10.0 (10.6, 8.8)
1PZ engine	9.6 (10.1, 8.4)
1HZ engine	9.9 (10.5, 8.7)

Coolant type:
With ethylene-glycol antifreeze or anticorrosive (Toyota "RADIATOR CONDITIONER" anticorrosive or equivalent)
(Do not use alcohol type antifreeze.)

BATTERY

Specific gravity reading at 20°C (68°F):
1.260 Fully charged
1.160 Half charged
1.060 Discharged

Charging rates:

Quick charge	15 A max.
Slow charge	5 A max.

CLUTCH

Pedal freeplay, mm (in.):
22R and 22R-E engines
13 – 23 (0.5 – 0.9)
2L-T engine
5 – 10 (0.2 – 0.4)
1PZ and 1HZ engines
With clutch booster
15 – 30 (0.6 – 1.2)
Without clutch booster
13 – 23 (0.5 – 0.9)

Fluid type:
SAE J1703 or FMVSS No. 116 DOT 3

MANUAL TRANSMISSION

Oil capacity, L (qt., Imp. qt.):

22R engine	2.6 (2.7, 2.3)
22R-E engine	2.6 (2.7, 2.3)
1PZ engine	3.0 (3.2, 2.6)
2L-T engine	3.0 (3.2, 2.6)
1HZ engine	4.9 (5.2, 4.3)

Oil type:
Multipurpose gear oil API GL-4 or GL-5

Recommended oil viscosity:
22R, 22R-E, 2L-T and 1PZ engines
SAE 75W-90
1HZ engine
SAE 90

TRANSFER

Oil capacity, L (qt., Imp. qt.):

22R, 22R-E and 2L-T engines	2.1 (2.2, 1.8)
1PZ and 1HZ engines	2.2 (2.3, 1.9)

Oil type:
Multipurpose gear oil API GL-4 or GL-5

Recommended oil viscosity: SAE 90

POWER TAKE-OFF

Oil capacity, L (qt., Imp. qt.): 0.5 (0.5, 0.4)

Oil type:
Multipurpose gear oil API GL-4 or GL-5

Recommended oil viscosity: SAE 90

DIFFERENTIAL

Oil capacity, L (qt., Imp. qt.):
22R, 22R-E and 2L-T engines
Front 1.98 (2.09, 1.74)
Rear 1.85 (1.96, 1.63)
1PZ and 1HZ engines
Front 2.6 (2.7, 2.3)
Rear 2.5 (2.6, 2.2)

Oil type:
Standard differential
Hypoid gear oil API GL-5
Limited-slip differential
Hypoid gear oil for limited-slip differential API GL-5

Recommended oil viscosity:
Above −18°C (0°F)
SAE 90
Below −18°C (0°F)
SAE 80W or 80W-90

CHASSIS LUBRICATION

Wheel bearings:
Lithium base wheel bearing grease, NLGI No. 2

Steering knuckles:
Molybdenum-disulfide lithium base chassis grease, NLGI No. 2

Propeller shafts:
Lithium base wheel bearing grease, NLGI No. 2

BRAKES

Minimum pedal clearance when depressed, mm (in.): 68 (2.7)

Pedal freeplay, mm (in.): 3−6 (0.12−0.24)

Parking brake adjustment: 7−9 clicks

Fluid type:
SAE J1703 or FMVSS No. 116 DOT 3

STEERING

Wheel freeplay:
Less than 40 mm (1.6 in.)

Power steering fluid type:
Automatic transmission fluid DEXRON®-II

MECHANICAL WINCH

Capacity, kg (lb.): 2000 (4400)

Oil capacity, L (qt., Imp. qt.): 0.3 (0.32, 0.26)

Oil type:
Multipurpose gear oil API GL-4

Recommended oil viscosity: SAE 90

ELECTRIC WINCH

Capacity, kg (lb.): 1000 (2200)

Fluid capacity, L (qt., Imp. qt.): 2.0 (2.1, 1.8)

Fluid type:
Automatic transmission fluid Type F

Tires

Tire size and pressure:

Conventional tire

kPa (kg/cm^2 or bar, psi)

Model	Tire size	80 km/h (50 mph) or over		Under 80 km/h (50 mph) Sand driving	
		Front	Rear	Front	Rear
HZJ70 and HZJ73	215/80R16 265/75R15	200 (2.0, 29) 180 (1.8, 26)	220 (2.2, 32) 200 (2.0, 29)	180 (1.8, 26) 180 (1.8, 26)	200 (2.0, 29) 200 (2.0, 29)
PZJ75	7.50-16-8PRLT 205R16C 8PR	240 (2.4, 35) 250 (2.5, 36)	400 (4.0, 58) 450 (4.5, 65)	240 (2.4, 35) 220 (2.2, 32)	350 (3.5, 51) 450 (4.5, 65)
RJ70, RJ73, LJ70 and LJ73	7.00-16-6PRLT 215/80R16 265/75R15	180 (1.8, 26) 180 (1.8, 26) 180 (1.8, 26)	260 (2.6, 38) 220 (2.2, 32) 200 (2.0, 29)	180 (1.8, 26) 160 (1.6, 23) 180 (1.8, 26)	240 (2.4, 35) 200 (2.0, 29) 200 (2.0, 29)
LJ77	215/80R16 265/75R15	200 (2.0, 29) 180 (1.8, 26)	280 (2.8, 41) 200 (2.0, 29)	180 (1.8, 26) 180 (1.8, 26)	260 (2.6, 38) 200 (2.0, 29)

Snow tire

Same as conventional tire

Wheel nut torque, N·m (kgf·m, ft·lb): 157 (16, 116)

Fuses

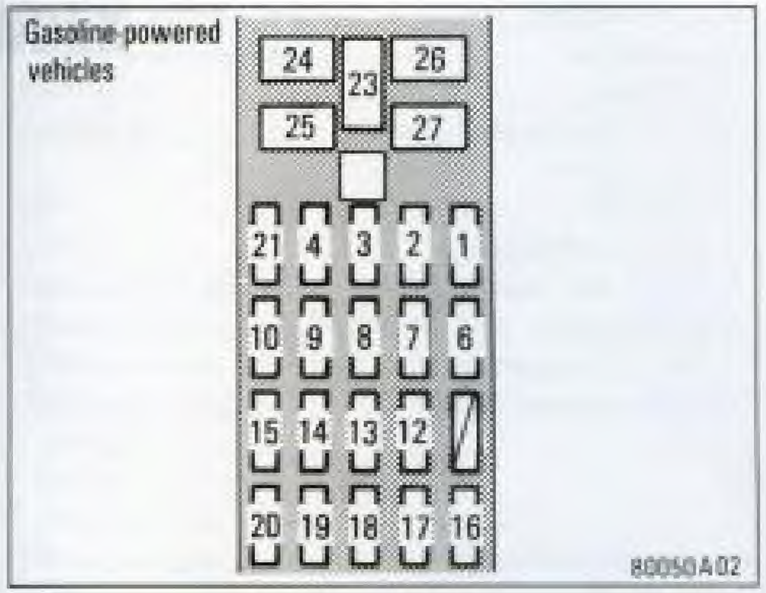

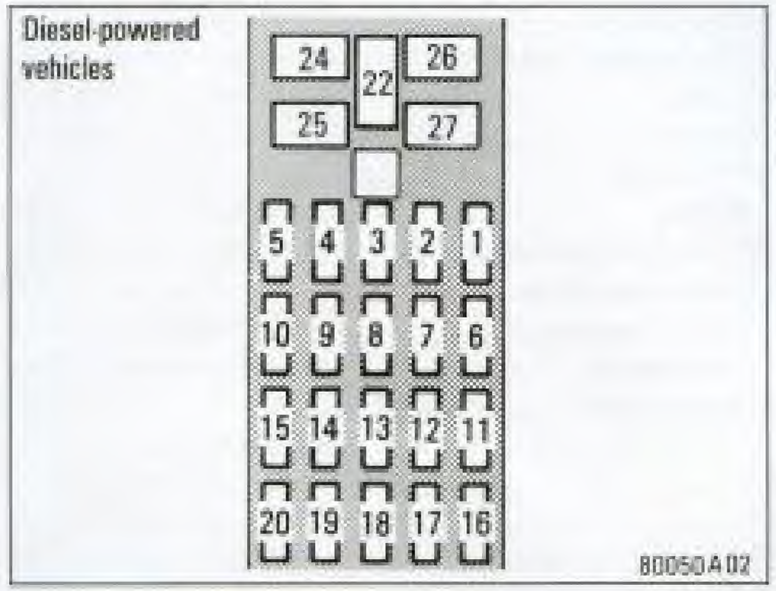

Type A fuses

1. SPARE 7.5 A : Spare fuse

2. SPARE 15 A : Spare fuse

3. CHARGE 7.5 A: Charging system

4. CIG 15 A: Cigarette lighter, digital clock display, thermometer, radio

5. ECU-B 10 A (diesel-powered vehicles): No circuit

6. A.C 10 A: Air conditioning cooling system

7. TURN 7.5 A: Turn signal lights

8. DEFOG 15 A: Rear window defogger

9. WIPER 20 A: Windshield wipers and washer, rear window wiper and washer, headlight cleaner, back-up lights, winch control switch

10. ENGINE 15 A: Charging system, emission control system, gauges and meters, warning lights and buzzers

11. ST 7.5 A: Starting system

12. STOP 10 A: Stop lights

13. DOME 7.5 A: Interior light, personal lights, rear fog light, luggage compartment light, clock, radio

14. HEAD (LH-LWR) 10 A: Left-hand headlight (low beam)

15. HEAD (RH-LWR) 10 A: Right-hand headlight (low beam)

16. TAIL (LH) 10 A: Left-hand tail light, left-hand parking light

17. TAIL (RH) 10 A: Right-hand tail light, right-hand parking light, license plate lights, instrument panel lights

18. HAZ-HORN 15 A: Emergency flashers, horns

19. HEAD (LH-UPR) 10 A: Left-hand headlight (high beam)

20. HEAD (RH-UPR) 10 A: Right-hand headlight (high beam)

21. EFI 15 A (vehicles with 22R-E engine): Electronic fuel injection system

22. FUEL-HTR 15 A: Fuel heater

23. IGN 7.5 A: Electronic fuel injection system

Type B fuses

24. POWER 30 A: Electric moon roof, power windows

25. DIFF 30 A: Differential lock system, front drive control system

26. DOOR 30 A: Power door lock system

27. HEATER 30 A: Air conditioning system

Part 9
INDEX

A

Adding washer fluid 190
Adjustment
  Front seats 31
  Seat belt 42,43
Air bleeding 136
Air cleaner 168,170
Air conditioner controls 87
Altimeter 58
Aluminum wheel precautions 184
Anti-glare inside rear view mirror 45
Anti-theft steering column lock 63,64
Antifreeze 166
Appearance care
  Cleaning the interior 153
  Protecting your Toyota from corrosion ... 151
  Washing and waxing 152
Audio system 75
Auxiliary catch, Engine hood 13

B

Back door 12
Battery
  Checking battery condition and fluid level . 185
  Fluid level 185
  Gas caution 185
  Handling safety 185
  Recharging precautions 187
  Winter driving tips 129
Before starting the engine 121
Belts
  Engine drive 163
Brake system 116
Brake system warning light 59
Brakes
  Booster 175
  Fluid level 174
  Parking 73
  Parking brake adjustment 175
  Pedal clearance 175
  Pedal freeplay 174
  Pedal travel 175
Break-in tips 112

C

Car audio 75
Carbon monoxide caution 114
Cassette tape player 75,81
Catalytic converter 113
Changing the engine coolant 166
Changing the engine oil and filter 164
Checking and replacing fuses 187
Checking brake and clutch fluid 174
Checking fusible links 188
Checking the brake booster 175
Checking the clutch booster 173
Checking the engine drive belts 163
Checking the engine oil level 164
Cigarette lighter and ashtray 103
Cleaning the interior 153
Clinometers 58
Clock 101,102
Clutch
  Booster 173
  Fluid level 174
  Pedal freeplay 173
Cold weather
  Operation 129
Controls, Instrument panel 2,4,6
Cooling system
  Coolant level 166
  Engine overheating 139
  Radiator and reservoir 166
  Radiator cap 139
  Winter driving tips 129
Corrosion prevention 151

D

Dashboard vents 99
Defogger, Rear window 53
Differential
  Oil level 180
Differential, Limited slip 118
Dimmer switch, Headlight 47
Directional signals 47
Discharge warning light 59
Do-it-yourself maintenance 162
Does your vehicle need repairing? 156
Door locks 8
Door vent windows 12
Driving
  Driving tips 121,122,123,124,125
  Manual transmission 65
Driving tips
  Driving tips in various conditions 127
  Driving with a manual transmission 65
  Economical driving 132
  Good driving practice 65

Pretrip safety check 126
Winter driving tips 129
During
Break-in 112

E

Economical driving
Saving money on both fuel and repairs 132
Electric winch 107
Electrical system
Battery 185,187
Fuses 187
Fusible links 188
Spark plugs 172
Emergency flasher switch 49,50
Emergency, In case of
Bleeding the fuel system 136
Blown fuse 187
Emergency flasher switch 49,50
Flat tire 139
If the moon roof does not close 150
If you lose your keys 150
If your engine stalls while driving 138
If your vehicle needs to be towed 148
If your vehicle will not start 135,136
Jump starting 137
Overheating 139
Towing 148
Engine
Air cleaner 168,170
Antifreeze 166
Before starting the engine 121
Catalytic converter 113
Changing the engine coolant 166
Changing the oil and filter 164
Checking the coolant level 166
Coolant 166
Drive belts 163
Emission control device 113
Engine compartment 158,159,160,161
Exhaust gas caution 114
Hood release 13
Oil consumption 115
Oil level 164
Oil pressure gauge 56
Overheating 139
Spark plugs 172
Starting procedure 121,122,123,124,125
Temperature gauge 55
Turning off a turbo engine 126
Engine coolant
Winter driving tips 129
Engine oil
Winter driving tips 129
Engine oil pressure gauge 56
Engine system warning light 59
Engine temperature gauge 55
Exhaust gas caution 114

F

Facts about engine oil consumption 115
Filter, Engine oil 164
Flasher, Headlight 47
Flat tire
After changing wheels 147
Changing tires 145
If you have a flat tire 139
Jack point 144
Jacking precautions 139
Jacking up 145
Loosening wheel nuts 144
Lowering vehicle 146
Reinstalling wheel ornament 147
Removing wheel ornament 143
Wheel block 143
Wheel nuts 146
Fluid level
Battery 185
Brake and clutch 174
Engine coolant 166
Power steering 176
Washer fluid 190
Fog light switch, Rear 50
Foreign countries, Operation in 113
Four-wheel drive
Operating the four-wheel drive system . 67,69
Free-wheeling hubs 68
Freeplay
Brake pedal 174
Clutch pedal 173
Steering wheel 176
Front and rear differential lock system 70
Front passenger's seat 33
Front seat
Rear seat entry 33
Front seats 31
Fuel
Bleeding the fuel system 136
Draining fuel filter water 167
Filler door opener 14

Fuel economy 132
Fuel information 112
Gauge 55
Operation in foreign countries 113
Tank cap 14,15
Fuel filter
Draining fuel filter water 167
Fuel filter warning light 59
Fully opened style 16
Fuses
Fuse box 187
Power outlet box 109
Fusible links 188

G

Gauge
Engine oil pressure 56
Engine temperature 55
Fuel 55
Glovebox 103
Good driving practice 65

H

Hazard switch 49,50
Headlight beam level control switch 48
Headlight cleaner switch 53
Headlight switch 47
Headlights
Replacement 190,191,194,196
Headrests 41
Heater controls 92
High speed operation
During break-in 112
Hood release, Engine 13
How to start the engine . 121,122,123,124,125

I

Identification
Engine 118
Vehicle 118
Ignition switch 63,64
Instrument panel
Cigarette lighter and ashtray 103
Clock 101,102
Engine oil pressure gauge 56
Fuel gauge 55
Odometer 57
Tachometer 57
Trip meter 57
Instrument panel overview 2,4,6
Interior light 50,51

J

Jack
Location 140,142
Jump starting 137

K

Key 7,150

L

Light bulbs, Replacing 198
Light reminder buzzer 59
Lights
Luggage compartment 51
Limited slip differential 118
Lock
Back door 12
Doors 8
Steering column 63,64
Low oil pressure warning light 59
Luggage compartment light 51
Luggage stowage precautions 117

M

Maintenance
Do-it-yourself maintenance 162
Does your vehicle need repairing? 156
Maintenance requirements 155
Where to go for service 155
Manual transmission
Driving with a manual transmission 65
Oil level 178
Shift pattern 65
Shifting speed 65
Maximum allowable speed
Manual transmission 65
Mechanical winch 104
Mirror
Anti-glare inside rear view 45
Moon roof 15,150

N

New vehicle break-in 112

O

Odometer 57
Off-road driving precautions 128
Off-road vehicle precautions 111
Oil
  Changing the engine oil and filter 164
  Consumption 115
  Differential 180
  Filter 164
  Manual transmission 178
  Power steering 176
  Pressure gauge 56
  Transfer 179
  Viscosity and grade 164
Open door warning light 59
Operation in foreign countries 113
Overheating, Engine 55,139
Overview
  Engine compartment 158,159,160,161

P

Parking brake
  Adjustment 175
  Operation 73
  Reminder light 73
Parking brake reminder light 59
Personal lights 51
Pintle hook 104
Polishing 152
Power outlet box 109
Power steering
  Fluid level 176
Power window switches 9,11
Precautions for turning off a turbo engine .. 126
Pretrip safety check 126
Propeller shafts
  Lubricating the propeller shafts 177
Protecting your Toyota from corrosion 151

R

Radiator
  Coolant, Engine 166
Radio 75,76,78,81
Rear differential lock system 71
Rear fog light switch 50
Rear heater controls 97
Rear seats 34,37
Rear step bumper 117
Rear view mirror, Anti-glare inside 45
Rear window defogger switch 53
Rear window wiper and washer switch 52
Replacing spark plugs 172
Replacing the wiper blades 189

S

Safety check, Pretrip 126
Seat belts
  Cleaning 153
  Fastening 42,43
  Seat belt precautions 41
Service and maintenance 155
Spare fuse 187
Spare tire 140,142
Spark plugs
  Replacement 172
Specifications 204
Starting
  Cold weather 121,122,123,124,125
  Engine 121,122,123,124,125
  Jump starting 137
Steering
  Column lock 63,64
  Tilt steering wheel 45
  Wheel freeplay 176
Steering knuckles
  Lubricating the steering knuckles 177
Switch
  Emergency flasher 49,50
  Headlight, dimmer and turn signal 47
  Ignition 63,64
  Rear fog light 50
  Rear window defogger 53
  Rear window wiper and washer 52
  Windshield wiper and washer 52

T

Tachometer 57
Tailgate 13
Thermometer 59
Throttle knob 64,65
Tie-down hooks 103
Tilt steering wheel 45
Timing belt replacement warning light 59
Tires
  Changing 139
  Flat tire 139
  Rotation 182

Spare 140,142
Tire information 180,181,182,183
Tools 140,142
Towing
Emergency towing 149
Emergency towing hook precautions 149
If your vehicle needs to be towed 148
Trailer 130
Trailer towing 130
Transfer
Oil level 179
Trip meter 57
Turbo operation indicator light 62
Turbo warning light 59
Turn signals 47

V

Voltmeter 57

W

Warning buzzers 59
Warning lights 59
Washer fluid
Adding washer fluid 190
Washing and waxing 152
Wheels
Aluminum wheel 184
Windshield wiper and washer switch 52
Winter driving tips 129
Wiper
Blades 189

ス

Quick index

- If a warning light or buzzer comes on 59
- If your vehicle will not start 135
- If your engine stalls while driving 138
- If your vehicle overheats 139
- If you have a flat tire 139
- If your vehicle needs to be towed 148
- Tips for driving during break-in period 127
- How to start the engine 121
- Pretrip safety check 126
- Complete index 213

Gas station information

Fuel type:

Gasoline engine—Use gasoline, leaded or unleaded, with the following octane number or higher (Reserch Octane Number).

22R engine	90
22R-E engine	91

Diesel engine—Use diesel fuel with cetane number 48 or higher.

Fuel tank capacity: 90 L (23.8 gal., 19.8 Imp. gal.)

Recommended engine oil: See pages 165 and 166.

Tire information: See pages 180 through 184.

Tire pressure: See page 210.

Publication No. OM60540E
Part No. 01999-60540
Printed in Japan 02-9202-00-2 I
ランドクルーザー(欧州E)